CRYOGENIC VALVES

CRYOGENIC VALVES

General

Habonim's cryogenic product line valves are subject to the general Habonim valves design, materials, practices, methodologies and certifications – for more information, see Valves General chapter.

Habonim cryogenic valves are equipped with the Total HermetiX integrity package for superior sealing, safety and environmental care.

Cleaning, Assembling and Packing

Cryogenic Service

A meticulous cleaning and assembly procedure eliminate the ignition hazards that can be caused by the presence of hydrocarbon oil, grease, and metal chips. Habonim uses an environment friendly, alkaline-based degreasing process with controlled parameters. Valves are assembled in an controlled area by personnel who are specially equipped and trained to perform this task. The assembling area, work surfaces, equipment and tools are specially maintained to ensure cleanliness requirements are met.

- Valves are cleaned and degreased for oxygen service
- Valves ends are capped, valves are plastic bagged
- A sticker on the plastic bag indicating "cryogenic use"

Quality

Reference standards

- Design, testing & inspection according to BS 6364:1984 (amendment 3)
- Testing EN 14432:2014
- Testing EN 1626:2008 (per request)
- NDT per ASME B16.34 - optional

Diverter valve

Multiport valve

Quick Selection Table

Total Hermetix™ | Port: Standard Port Full Port Tube Size | End Connections: Threaded Flanged Welded

OC Ordring Code

Temperature: Cryogenic Down to -269°C (-452°F)

Ball Valve	Design Type	OC	Series	TH	Port	End Con.	¼	⅜	½	¾	1	1¼	1½	2	2½	3	4	6	8	10	12
							Valve Size (Inches)												MWP (ASME Class / DIN PN)		
Trunnion Mounted Ball	Top Entry	OC	C52	TH	Full Port	Welded			300				300								
	3 Piece	OC	C91	TH	Standard Port, Full Port	Flanged, Welded										150					
		OC	C92	TH	Standard Port, Full Port	Flanged, Welded										300					
		OC	C93	TH	Standard Port, Full Port	Flanged, Welded										600					
		OC	C94	TH	Standard Port, Full Port	Flanged, Welded										900					
		OC	C95	TH	Standard Port, Full Port	Flanged, Welded										1500					
		OC	C96	TH	Standard Port, Full Port	Flanged, Welded										2500					
	2 Piece	OC	C81	TH	Full Port	Flanged										150					
		OC	C82	TH	Full Port	Flanged										300					
		OC	C83	TH	Full Port	Flanged										600					
Floating Ball	3 Piece	OC	C47	TH	Standard Port, Full Port	Threaded, Flanged, Welded	600								300						
		OC	C47-BD	TH	Standard Port, Full Port	Threaded, Flanged, Welded	300								150						
		OC	C26	TH	Full Port	Threaded, Flanged, Welded								600							
		OC	C28	TH	Standard Port, Full Port	Threaded, Flanged, Welded	2500														
	Diverter 3 Pcs.	OC	DC47	TH	Standard Port, Full Port	Threaded, Flanged, Welded			600												
	Multiport 3 Pcs.	OC	C61		Standard Port, Full Port	Threaded, Flanged, Welded	600								300						
	Multiport 3 Pcs.	OC	C62		Standard Port, Full Port	Threaded, Flanged, Welded	600								300						
	1 Piece	OC	C31	TH	Standard Port	Flanged			150												
		OC	C32	TH	Standard Port	Flanged			300												
	1 Piece 2 Piece	OC	C73	TH	Full Port	Flanged			150												
		OC	C74	TH	Full Port	Flanged			300												
		OC	C77	TH	Full Port	Flanged										PN16					
		OC	C78	TH	Full Port	Flanged			PN40												

ASME Class			150		300		600	900		1500		2500		6000
Pressure Bar	-1 *	0	16	20	40	50	100	150	200	250	350	420	700	1000
Pressure psi	-14 *	0	230	290	580	750	1500	2250	3000	3750	5000	6000	10000	15000

* Vacuum 10^{-6} Tor

CRYOGENIC VALVES

One-Way Assembly

An integral rib is machined at one of the stem flats to match a groove in the ball that faces the relief hole. A "T" mark on the stem tip shows the relief hole direction. These two features ensure a one-way assembly for safe operation and maintenance.

No-Trap Cavity

Each cryogenic valve is equipped with a mechanism that prevents pressure buildup in the valve cavity, eliminating the risk that liquefied-gas evaporation will over - pressure the valve body by releasing over-pressured media from the cavity area back to the line.

Habonim uses a variety of such mechanisms:

- Relief hole on the upstream sphere of the ball to prevent pressure buildup in the cavity
- Spring loaded seat construction with piston effect for cavity pressure relief
- Single seat active seal construction - no closed cavity

"T" mark on stem showing the relief hole direction

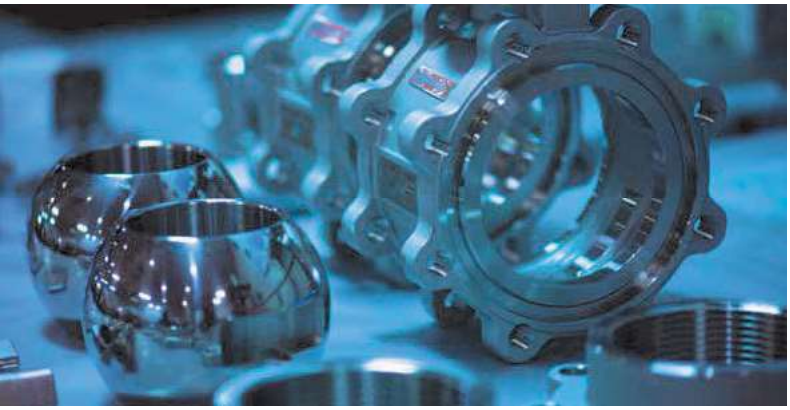

Minimal Thermal Expansion

Using one-size-up and double the amount of body bolts reduces linear thermal expansion and dramatically decreases the likelihood of leakage to the atmosphere.

Indicator on the extended bonnet top

Efficient Heat Transfer

The Habonim standard bonnet length design complies with BS6364 for non-cold-box applications. The long neck bonnet insulates the stem seal from the low temperatures of cryogenic fluids, thus enabling safe and long lasting seal service. A small gap between the bonnet ID and the stem OD, ensurs a thick layer between the media and the stem seal.

Inclination Limitation

The Habonim bonnet design comes in two optional versions. Both are designed to prevent cryogenic liquids from reaching the stem seal. Habonim recommends installation in the vertical position, but allows installation at an angle. The 12" bonnet can be installed up to 45° from the vertical axis to maintain fully BS6364 compliant. The 6" bonnet can be installed up to 15° from the vertical axis.

Indicator on valve body

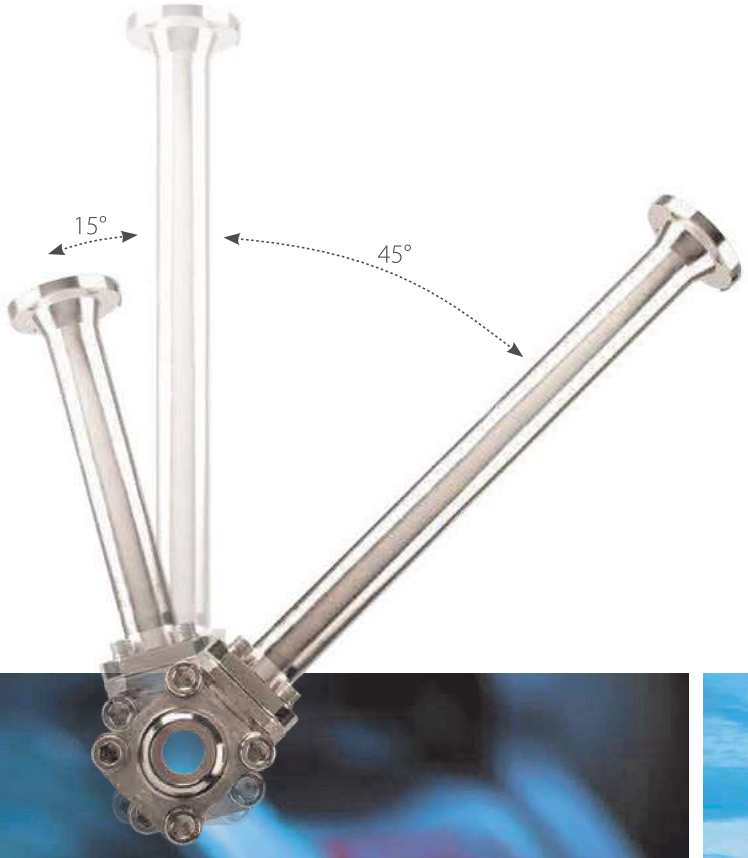

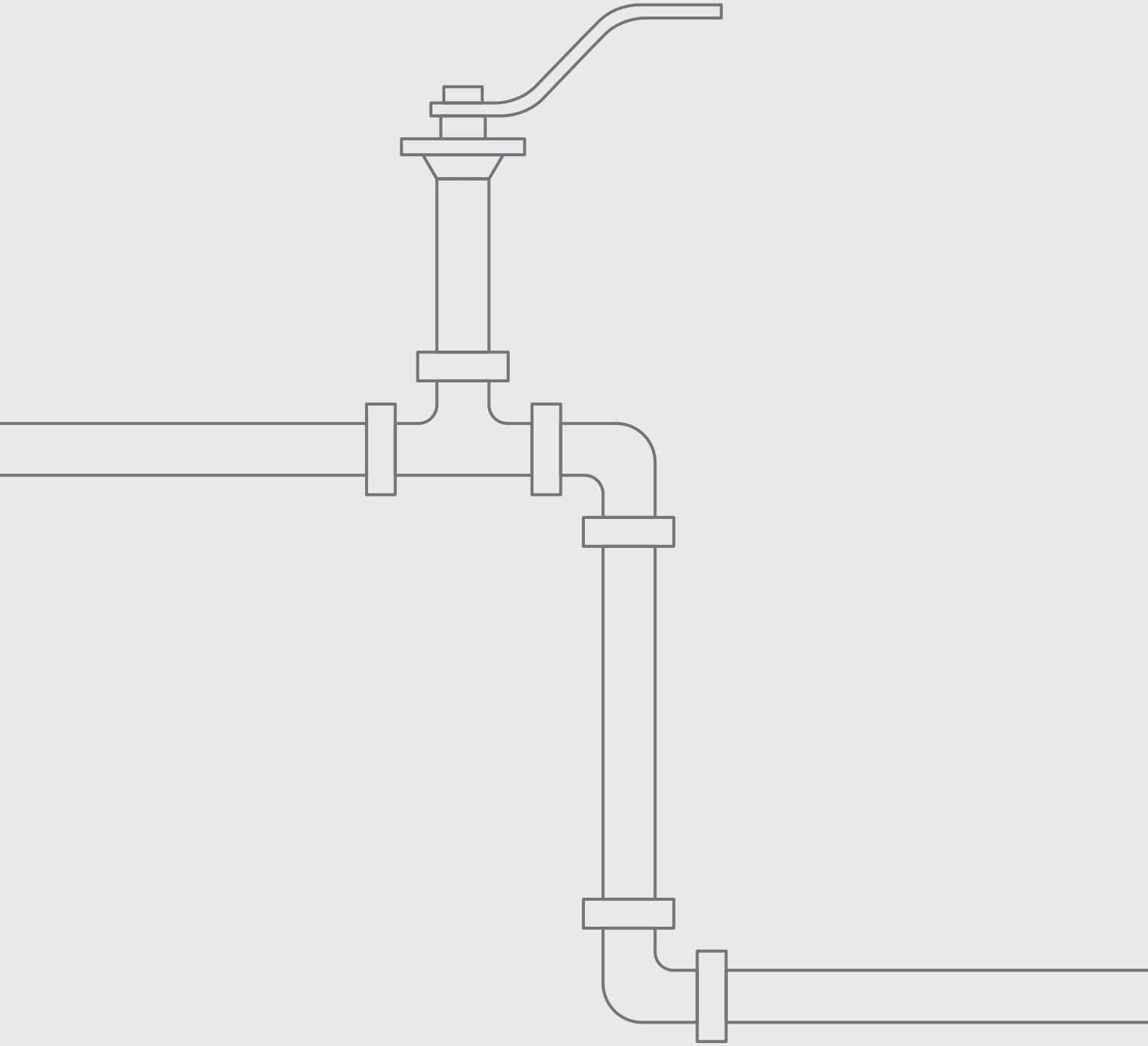

TRUNNION

TOP ENTRY

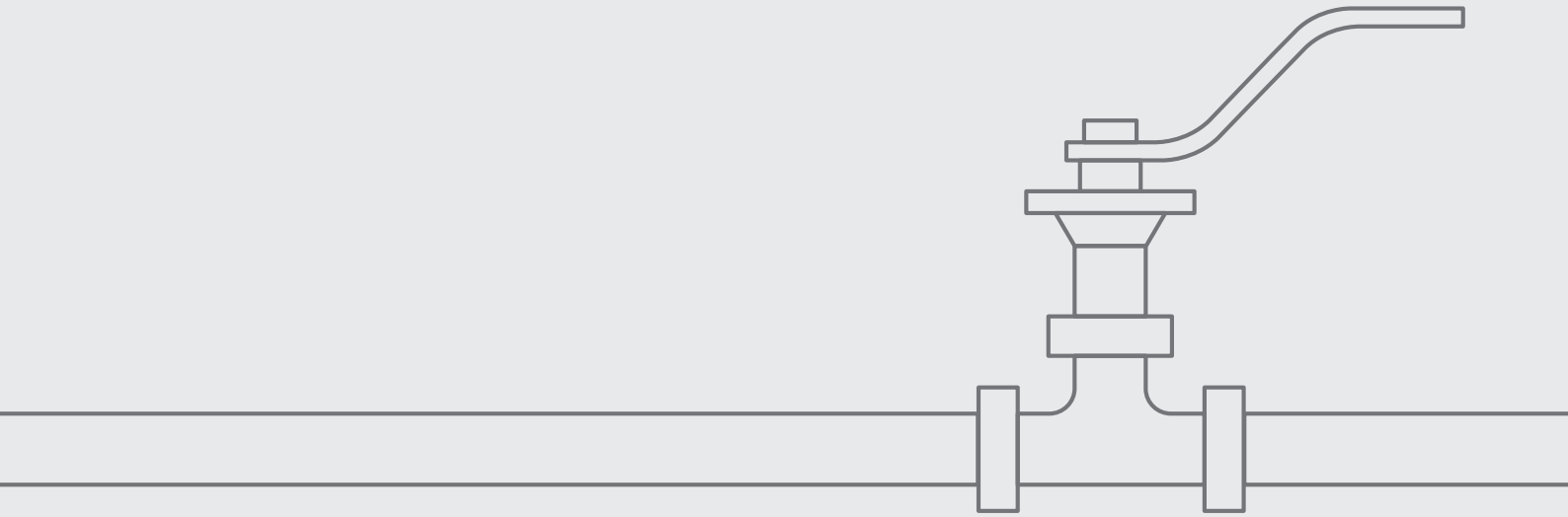

Cryogenic Top Entry Trunnion Mounted Ball Valve

PATENT PENDING

Valve dimensions

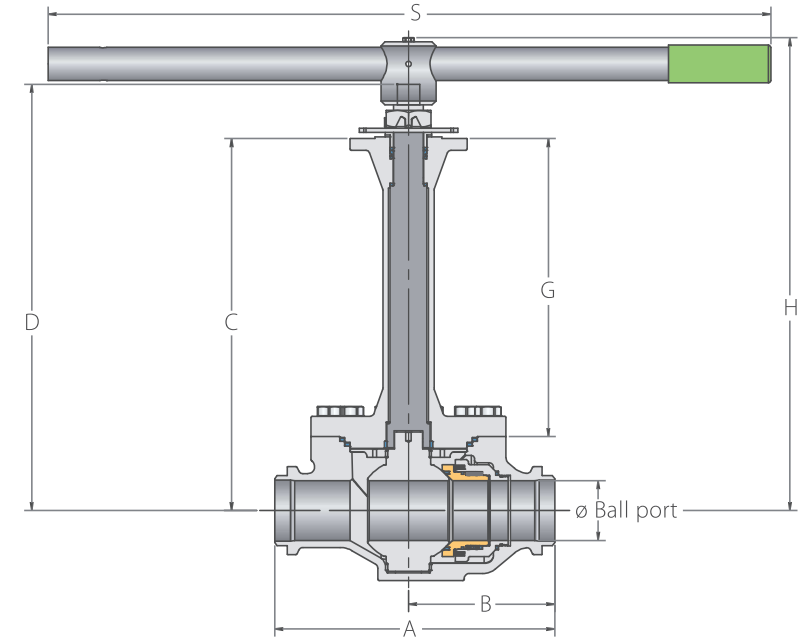

Standard stem tops

DD Type
for sizes ½" - 1½"

Stem flats
show valve
ball position

Square Type
for sizes 2" - 6"

Stem groove
shows valve
ball position

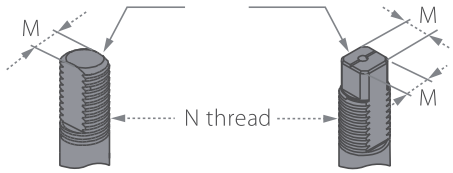

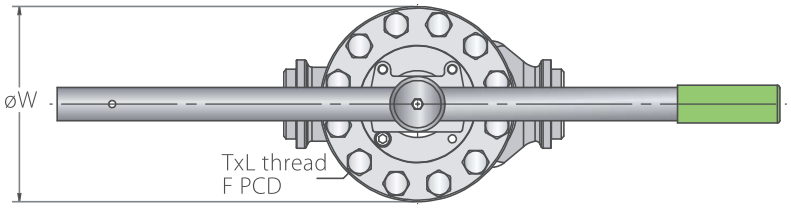

Handle type for sizes ½" - 1"

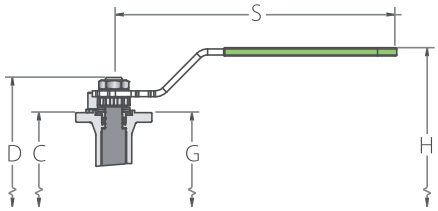

Preparation for actuation

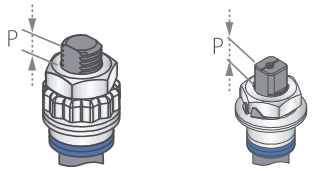

½" - 1"
with nut

1½" - 6"

Full Port	Units	Ball port	A	B	C	D	G	H	S [1]	W	M	N	P	Q	F		TxL	Weight kg/lb	KV CV
DN15	mm	14.0	165.0	88.0	340.0	357.4	301.0	383.2	187.0	105.0	7.5	7/16"-20 UNF	6.4		F04	42.0	M5x7	5.3	20
½"	inch	0.55	6.50	3.46	13.39	14.07	11.85	15.09	7.36	4.13	0.30		0.25			1.65		11.68	23
DN20	mm	20.0	190.0	100.0	353.0	382.5	309.0	407.5	237.0	121.0	8.7	9/16"-18 UNF	8.5		F05	50.0	M6x8	7.5	31
¾"	inch	0.79	7.48	3.94	13.90	15.06	12.17	16.04	9.33	4.76	0.34		0.33			1.97		16.53	36
DN25	mm	25.4	216.0	113.0	358.0	387.5	309.0	412.5	237.0	131.0	8.7	9/16"-18 UNF	8.5		F05	50.0	M6x8	9.0	61
1"	inch	1.00	8.50	4.45	14.09	15.26	12.17	16.24	9.33	5.16	0.34		0.33			1.97		19.84	70
DN40	mm	38.2	241.0	129.0	389.0	430.6	330.4	456.6	401.0	173.0	13.9	M20x2.5	15.2	20.0	F07	70.0	M8x9	17.0	164
1½"	inch	1.50	9.49	5.08	15.31	16.95	13.01	17.98	15.79	6.81	0.55		0.60	0.79		2.76		37.48	190
DN50	mm	50.8	292.0	151.0	428.0	474.5	349.5	514.0	610.0	205.0	18.9	1"-14 UNS	16.6	22.7	F10	102.0	M10x15	32.0	327
2"	inch	2.00	11.50	5.94	16.85	18.68	13.76	20.24	24.02	8.07	0.74		0.65	0.89		4.02		70.55	378
DN65	mm	62.7	330.0	168.0	425.0	471.5	339.0	511.0	610.0	228.0	18.90	1"-14 UNS	16.6	22.7	F12	102.0	M12x15	39.0	668
2½"	inch	2.47	12.99	6.61	16.73	18.56	13.35	20.12	24.02	8.98	0.74		0.65	0.89		4.02		85.98	772
DN80	mm	74.0	356.0	186.0	473.0	542.1	379.0	601.2	916.0	248.0	28.45	1½"-12 UNF	26.2	35.2	F12	125.0	M12x15	58.0	823
3"	inch	2.91	14.02	7.32	18.62	21.34	14.92	23.67	36.06	9.76	1.12		1.03	1.39		4.92		127.87	951
DN100	mm	100.0	432.0	220.0	490.4	559.5	378.4	619.3	916.0	305.0	28.45	1½"-12 UNF	26.2	35.2	F12	125.0	M12x15	82.0	1678
4"	inch	3.94	17.01	8.66	19.31	22.03	14.90	24.38	36.06	12.01	1.12		1.03	1.39		4.92		180.78	1940
DN150	mm	150.0	559.0	280.0	559.0	671.7	404.0	735.7	916.0	419.0	35.9	2"-8 UN	40.0	43.5	F14	165.0	M16x20	158.0	4199
6"	inch	5.91	22.01	11.02	22.01	26.44	15.91	28.96	36.06	16.50	1.41		1.57	1.71		6.50		348.33	4854

[1] Manual gear or actuation recommended, when the operation force on the handle overcomes 360N

Cryogenic Top Entry Trunnion Mounted Ball Valve

Components & materials

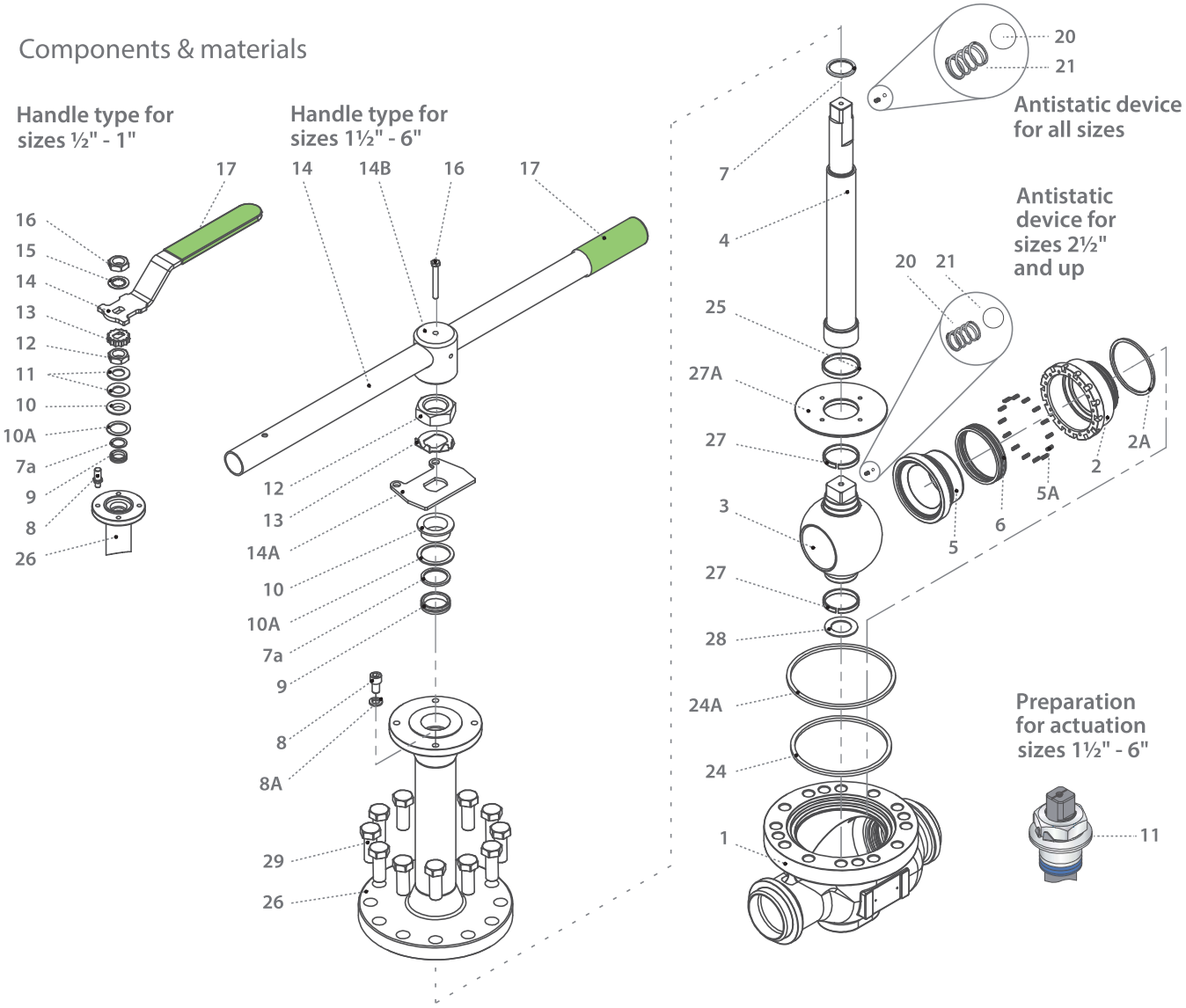

Item	Description	Material specifications	Qty.
1	Body	Acc. Ordering Code	1
2*	Seat Housing	S. Steel	1
2A*	Housing Seal	S. Steel	1
3	Ball	S. Steel	1
4	Stem	High Strength S.Steel	1
5*	Hybrid seat	A479 316/316L + TFM, CF PTFE, PCTFE	1
5A*	Seat spring	Inconel X750	6-18
6*	Lip seal	V-PTFE + UNS R30003	2
7*	Stem thrust seal	PCTFE, TFM	1
7a*	Anti-abrasion ring	PCTFE, TFM	1
8	Stop screw	EN 3506-1 A4-80	1
8A	Spring washer	S. Steel	1
9*	Stem seal	TFM	1
10	Follower	S. Steel	1
10A*	Slide bearing	S. Steel	1
11	Disc spring	S. Steel	2
12	Stem nut	S. Steel	1
13	Locking clip (Tab lock washer for 1.5" and up)	S. Steel	1

Item	Description	Material specifications	Qty.
14**	Handle	S. Steel	1
14A	Stop plate	S. Steel	1
14B	Wrench head	S. Steel	1
15	Serrated washer	S. Steel	1
16	Handle nut (Wrench bolt for 1.5" and up)	S. Steel	1
17	Sleeve	PVC	1
20	Anti-static spring	S. Steel	1-2
21	Anti-static plunger	S. Steel	1-2
23	Tag (not shown)	S. Steel	1
24*	Bonnet primary seal	TFM	1
24A*	Bonnet secondary seal	Graphite	1
25*	Stem bearing	TFM	1
26	Bonnet	S. Steel	1
27*	Ball radial bearing	316L + PTFE	2
27A	Centering plate	A479 316/316L	1
28*	Lower thrust washer	DIN 127 A2	1
29	Bonnet bolt	A193 B8M, DIN 3506 A2-70	12

* Repair kit components

** Manual gear or actuation recommended, when the operation force on the handle overcomes 360N

Cryogenic Top Entry Trunnion Mounted Ball Valve

PATENT PENDING

Valve dimensions

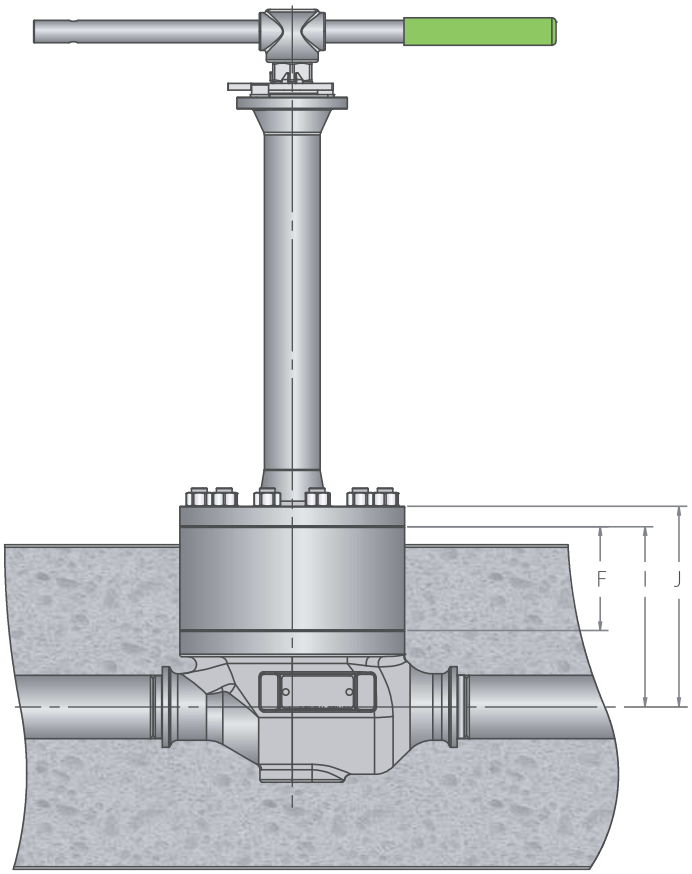

Extended hub

- Extended hub for insulated lines
- Extends valve cover over the insulation boundary
- Allows inner parts access and maintenance without dismantling the insulation
- Fits different insulation types and sizes used on the market
- The extended hub is an "add-on" kit to the standard valve.

Size	Unit	Extended Hub			Semi-Extended Hub		
		F(1)	I(2)	J(3)	F(1)	I(2)	J(3)
DN15	mm	-	-	-	25	64	74
½"	inch	-	-	-	0.98	2.52	2.91
DN20	mm	-	-	-	35	79	92
¾"	inch	-	-	-	1.38	3.11	3.62
DN25	mm	-	-	-	45	94	107
1"	inch	-	-	-	1.77	3.7	4.21
DN40	mm	80	139.6	154.6	50	109.6	124.6
1½"	inch	3.15	5.5	69	1.97	4.31	4.91
DN50	mm	85	160	181	50	125	146
2"	inch	3.35	6.3	7.13	1.97	4.92	5.75
DN65	mm	95	176	197	60	141	162
2½"	inch	3.74	6.93	7.76	2.36	5.55	6.38
DN80	mm	95	189	215	-	-	-
3"	inch	3.74	7.44	8.46	-	-	-
DN100	mm	100	212	240	-	-	-
4"	inch	3.94	8.35	9.45	-	-	-
DN150	mm	100	249	284	-	-	-
6"	inch	3.94	9.8	11.18	-	-	-

Components & materials

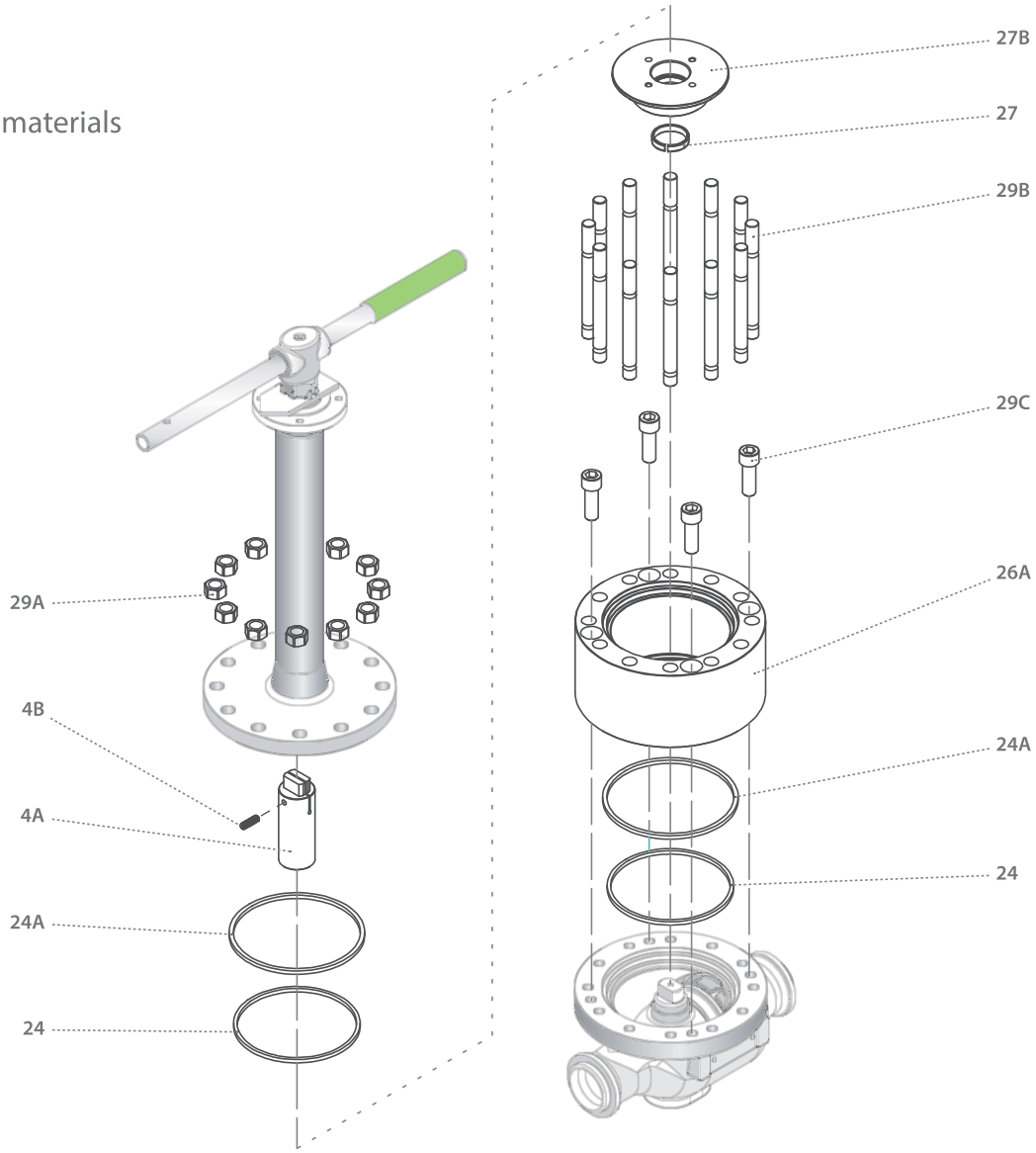

Item	Description	Material specifications	Qty.
4A	Stem extension (or one piece extended stem - optional)	High Strength S. Steel	1
4B	Clamp screw	S. Steel	1
24*	Bonnet primary seal	TFM	2
24A*	Bonnet secondary seal	Graphite	2
26A	Hub	A479 316/316L/CF8M	1
27*	Ball radial bearing	316L + PTFE	1
27B	Centering plate for extended hub	A479 316/316L	1
29A	Bonnet nut	S. Steel	12
29B	Bonnet stud	S. Steel	12
29C	Hub bolt	S. Steel	2-4

* Repair kit components

Cryogenic Top Entry Trunnion Mounted Ball Valve - Ordering Code System

"Mandatory option" options are marked with green background | "Standard offer" options are marked with light green background

1	2	3	4	5	6	7	8	9	10	11	12	13	14	15	16	17	18	19	20	21	22	23	24	.	.	30
1	5		F	C	B	5	2	W	-	6	M	6	D	P	A	G	/	X	B	W						
Size		Features				Series		Design		Body/ Bonnet	Stem	Ball & seat ring	Seat feature	Seat insert	Primary bonnet seal	Secondary bonnet seat		End conection				Special features				

Size (1-2)		
Code	inch	mm
05	½"	15
07	¾"	20
10	1"	25
15	1½"	40
20	2"	50
25	2½"	65
30	3"	80
40	4"	100
60	6"	150

Features (3-6)	
F	Fire safe
C	Cryogenic design
B	Full port

Series (7-8)	
52	ASME #300 Top Entry

Design (9)	
W	Total HermetiX Integrity package

Body & Bonnet (11)	
6	S. Steel

Stem material (12)	
M	High Strength S. Steel

Ball & seat ring material (13)	
6	S. Steel

Seat feature (14)	
D	Double Piston Effect (DPE)

Seat insert (15)	
P	CF PTFE
A	TFM
C	PCTFE

Primary bonnet seal (16)*	
A	TFM

* Graphite seal used as a secondary bonnet seal for a fire safe valve and TFM for non-fire safe

Secondary bonnet seat (17)	
G	Graphite

End Connection (19-22)	
Welded ends	
XBW	Extended buttweld sch 40
XBW10	Extended buttweld sch 10
XBW80	Extended buttweld sch 80
ETI-S	Extended Butt weld ISO 1127, S=wall thickness in mm

Special Features (24-30)	
EXH	Extended Hub
EXS	Semi-Extended Hub

TRUNNION

3 PIECE

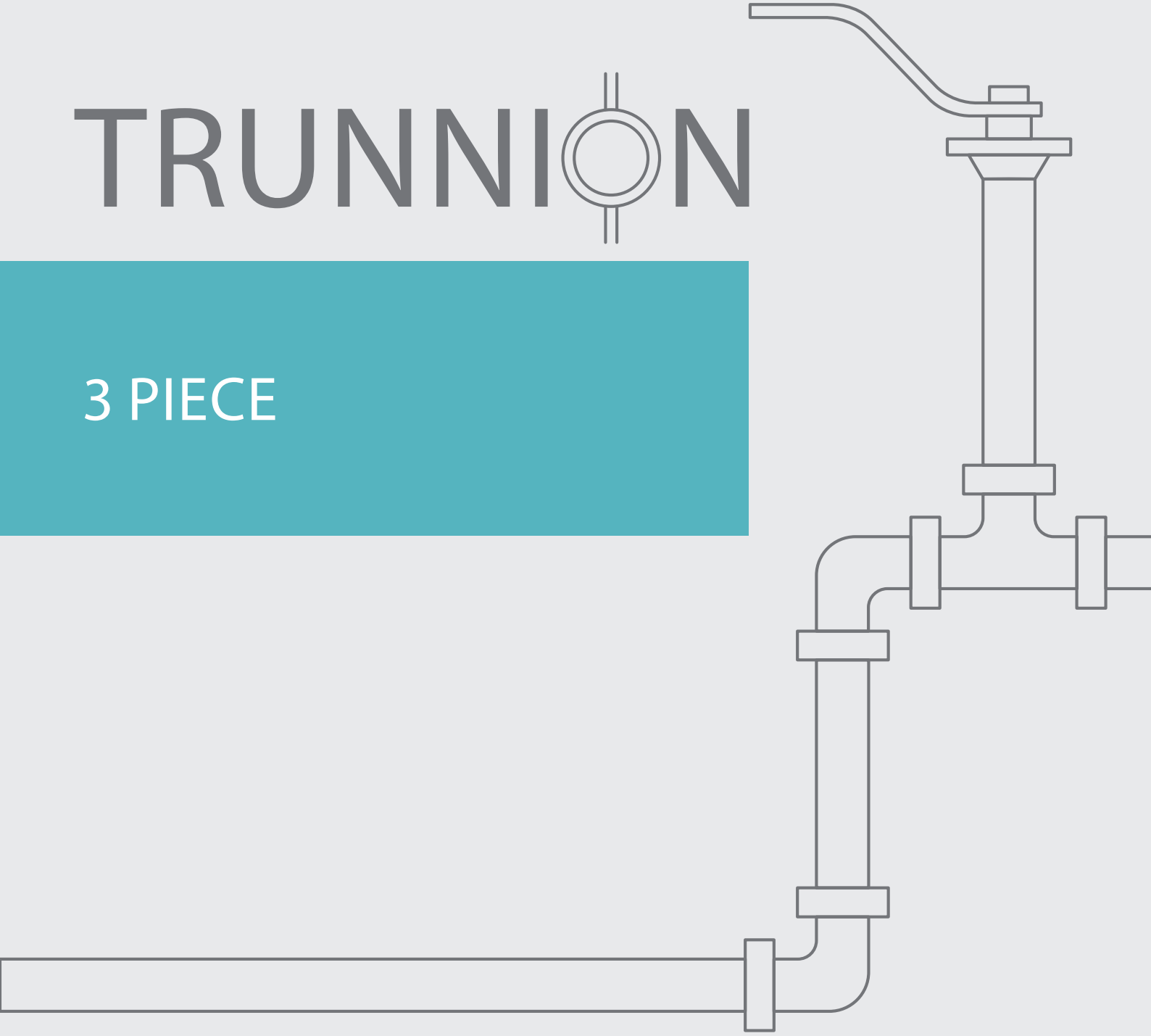

C91 C92 2"-6" | DN50-DN150 | CLASS 150/300

Cryogenic Trunnion Mounted Ball 3 Piece

Valve dimensions

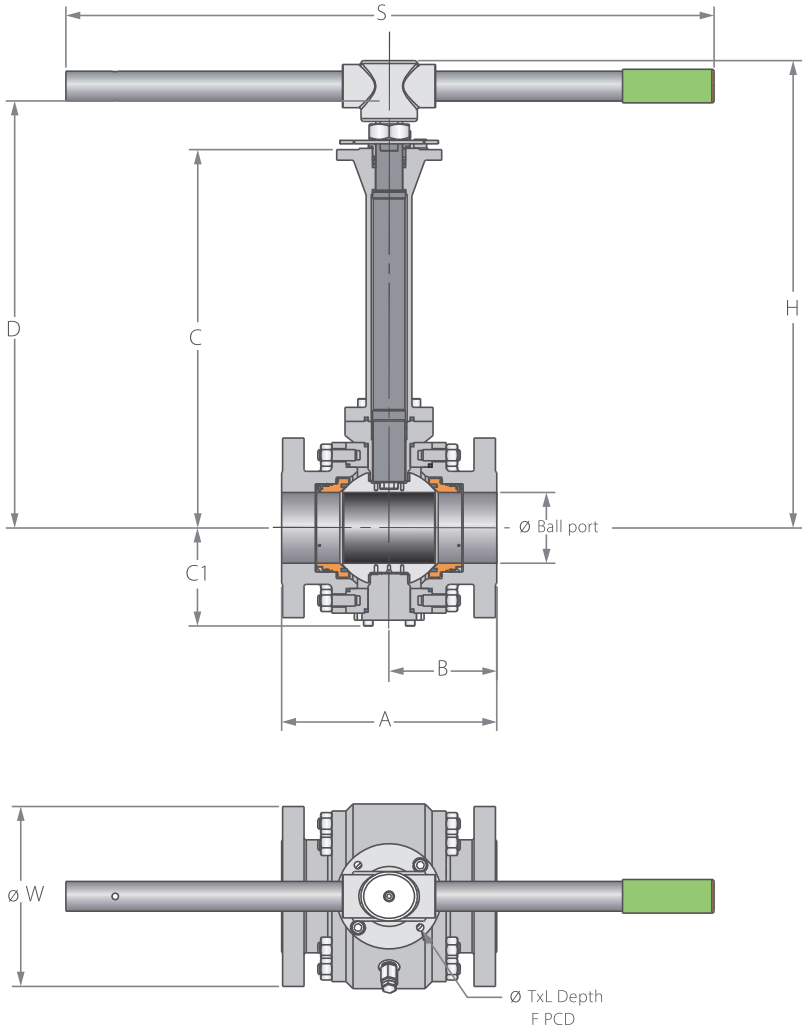

Preparation for actuation

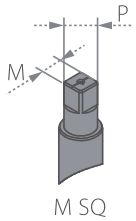

Std. port	Unit	Ball port	A		B		C	C1	D	W		M SQ	P SQ	H	S	F		TxL	Weight kg/ib		Kv / Cv	
			150	300	150	300				150	300								150	300	150	300
DN50	mm	49	178	216	89	108	500	94	546.5	150	165	18.9	22.7	525.8	401	(F10)	102	M10X15 (4 holes)	27	31	400	363
2"	inch	1.93	7.01	8.50	3.50	4.25	19.69	3.7	21.52	5.91	6.5	0.74	0.89	20.7	15.79		4.02		60	68	463	420
DN80	mm	74	203	283	101	141.5	550	117	619.1	190	210	28.45	35.2	638.6	610	(F12)	125	M12X15 (4 holes)	44	61	1125	952
3"	inch	2.91	7.99	11.14	4	5.57	21.65	4.61	24.37	7.48	8.27	1.12	1.39	25.14	24.02		4.92		97	134	1300	1100
DN100	mm	100	229	305	114.0	152.5	600	139	669.1	230	255	28.45	35.2	662.6	916	(F12)	125	M12X15 (4 holes)	66	100	2154	1860
4"	inch	3.94	9.02	12	4.51	6	236.22	5.47	26.34	9.06	10.04	1.12	1.39	26.09	36.06		4.92		146	220	2490	2150
DN150	mm	150	394	403	197	201.5	607	191	719.6	280	320	35.9	43.5	777.1	916	(F14)	140	M16X20 (4 holes)	180	216	4723	4628
6"	inch	5.91	15.51	15.87	7.76	7.93	23.9	7.52	28.33	11.02	12.6	1.41	1.71	30.59	36.06		5.51		397	476	5460	5350

Cryogenic Trunnion Mounted Ball 3 Piece

Valve dimensions

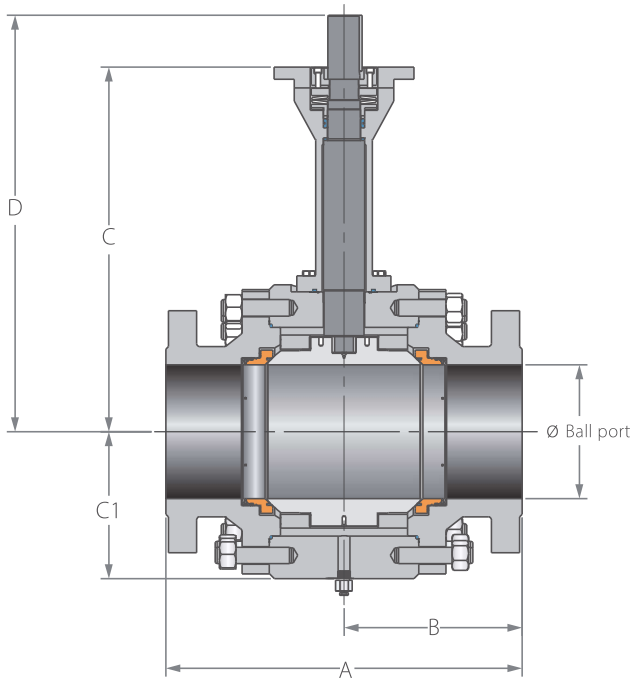

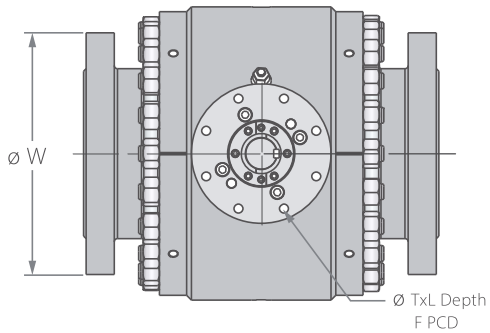

Preparation for actuation

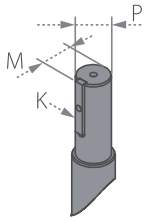

Std. port	Unit	Ball port	A		B		C	C1	D	W		P	M	K	F		TxL	Weight kg/ib		Kv / Cv	
			150	300	150	300				150	300							150	300	150	300
DN200	mm	201.0	457.0	502.0	228.50	251.0	708.0	215.0	785.0	345.0	380.0	50.0	54.0	14.0	(F16)	165.0	22x25 (4 holes)	346	378	9273	8737
8"	inch	7.91	17.99	19.76	9.0	9.88	27.87	8.46	30.91	13.58	14.96	1.97	2.13	0.55		6.50		763	833	10720	10100
DN250	mm	252.0	533.0	568.0	266.0	284.0	713.3	260.0	790.4	405.0	445.0	50.0	54.0	14.0	(F25)	254.0	18x25 (8 holes)	518	639	15224	14792
10"	inch	9.92	20.98	22.36	10.49	11.18	28.08	10.24	31.12	15.94	17.52	1.97	2.13	0.55		10.0		1142	1409	17600	17100
DN300	mm	303.0	610.0	648.0	305.0	324.0	800.0	300.0	880.0	485.0	520.0	60.0	63.5	18.0	(F25)	254.0	18x25 (8 holes)	723	833	23096	22404
12"	inch	11.93	24.02	25.51	12.01	12.76	31.50	11.81	34.67	19.09	20.47	2.36	2.50	0.71		10.0		1594	1836	26700	25900

C93 C94 2"-6" | DN50-DN150 | CLASS 600/900

Cryogenic Trunnion Mounted Ball 3 Piece

Valve dimensions

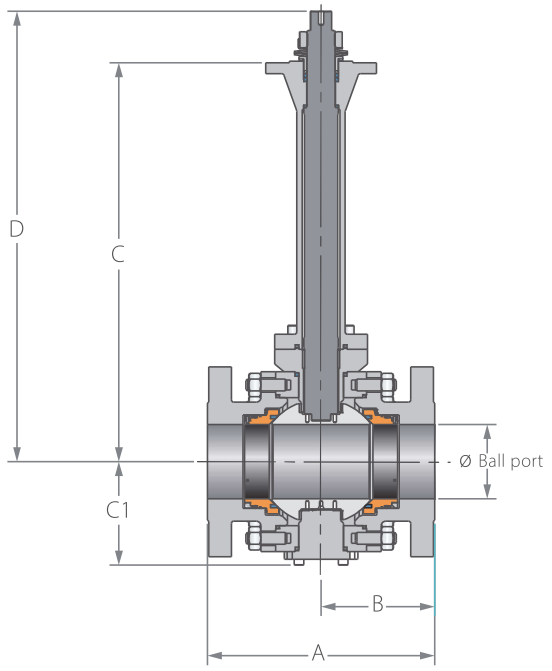

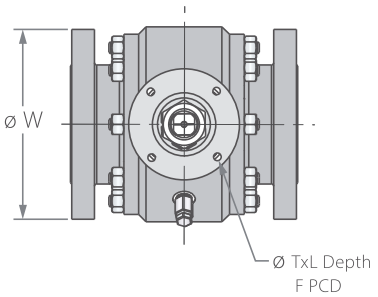

Preparation for actuation

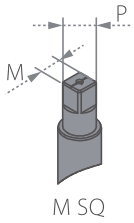

Std. port	Unit	Ball port	A		B		C		C1		D		W		M SQ	P SQ	F		TxL	Weight kg/ib		Kv / Cv	
			600	900	600	900	600	900	600	900	600	900	150	300						150	300	150	300
DN50	mm	49	292	368	146	184	500	459.5	119	263	547.5	507	165	215	18.9	22.7	(F10)	102	M10X15 (4 holes)	49	67	329	294
2"	inch	1.93	11.5	14.49	5.75	7.24	19.69	18.09	4.69	10.35	21.56	19.96	6.5	8.46	0.74	0.89		4.02		108	148	380	340
DN80	mm	74	356	381	178	190.5	550	502	160	152.7	617	569	210	240	28.45	35.2	(F12)	125	M12X15 (4 holes)	103	114	874	822
3"	inch	2.91	14.02	15	7.01	7.5	21.65	19.76	6.3	6.01	24.29	22.4	8.27	9.45	1.12	1.39		4.92		227	251	1010	950
DN100	mm	100	432	457	216	228.5	600	193	184	184	712.6	259	275	290	35.9	43.5	(F14)	140	M16X20 (4 holes)	166	186	1557	1471
4"	inch	3.94	17.01	17.99	8.5	9	23.62	7.6	7.24	7.24	28.06	10.2	10.83	11.42	1.41	1.71		5.51		366	410	1800	1700
DN150	mm	150	559	610	279.5	305	624.5	642.5	214.5	224	737.1	755.1	355	380	35.9	43.5	(F14)	140	M16X20 (4 holes)	342	418	3893	3823
6"	inch	5.91	22.01	24.02	11	12.01	24.59	25.3	8.44	8.82	29.02	29.73	13.98	14.96	1.41	1.71		5.51		754	922	4500	4420

Cryogenic Trunnion Mounted Ball 3 Piece

Valve dimensions

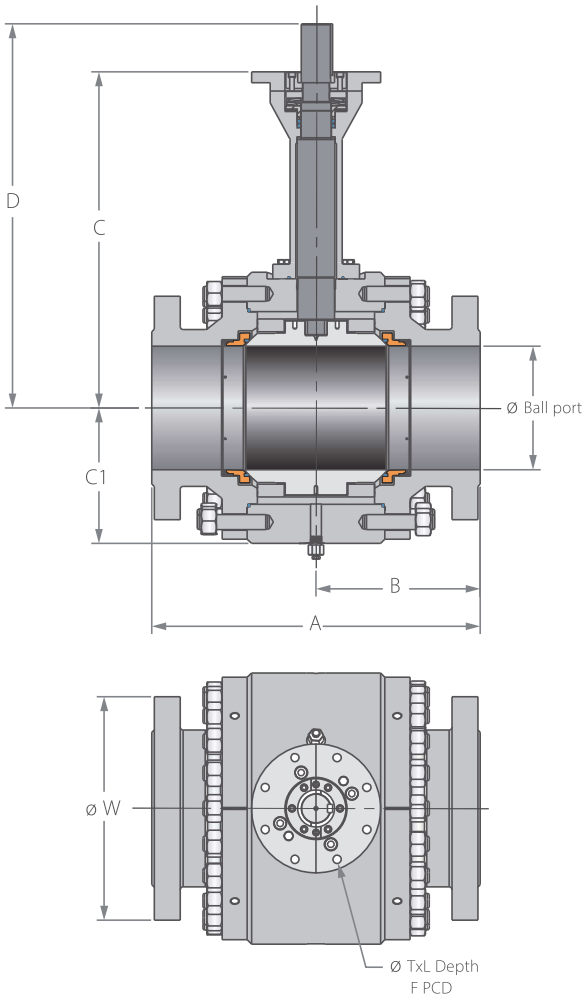

Preparation for actuation

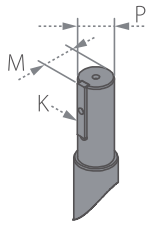

Std. port	Unit	Ball port	A		B		C		C1		D		W		P	M	K	F		TxL	Weight kg/ib		Kv / Cv	
			600	900	600	900	600	900	600	900	600	900	600	900							600	900	600	900
DN250	mm	201.0	660.0	737.0	330.0	368.5	696.0	696.0	263.0	263.0	774.0	774.0	420.0	470.0	60.0	63.5	14.0	(F25)	254.0	18x25 (8 holes)	577	836	7742	7344
8"	inch	7.91	25.98	29.02	12.99	14.51	27.4	27.4	10.35	10.35	30.47	30.47	16.54	18.5	2.36	2.5	0.55		10.0		1272	1843	8950	8490
DN100	mm	252.0	787.0	838.0	393.5	419.0	739.0	757.0	310.0	326.0	817.0	835.0	510.0	545.0	60.0	63.5	14.0	(F25)	254.0	18x35 (8 holes)	931	1301	12543	12110
10"	inch	9.92	30.98	32.99	15.49	16.50	29.09	29.80	12.20	12.83	32.17	32.87	20.08	21.46	2.36	2.5	0.55		10.0		2052	2868	14500	14000
DN300	mm	303.0	838.0	965.0	419.0	482.5	800.0	788.0	344.0	361.0	915.0	903.0	560.0	610.0	72.0	76.5	20.0	(F25)	254.0	18x35 (8 holes)	1126	1576	19809	18598
12"	inch	11.93	32.99	37.99	16.5	19.0	31.5	31.02	13.54	14.21	36.02	35.55	22.05	24.02	2.83	3.01	0.79		10.0		2482	3474	22900	21500

C95 C96 2"-6" | DN50-DN150 | CLASS 1500/2500

Cryogenic High Pressure Trunnion Mounted Ball 3 Piece

Valve dimensions

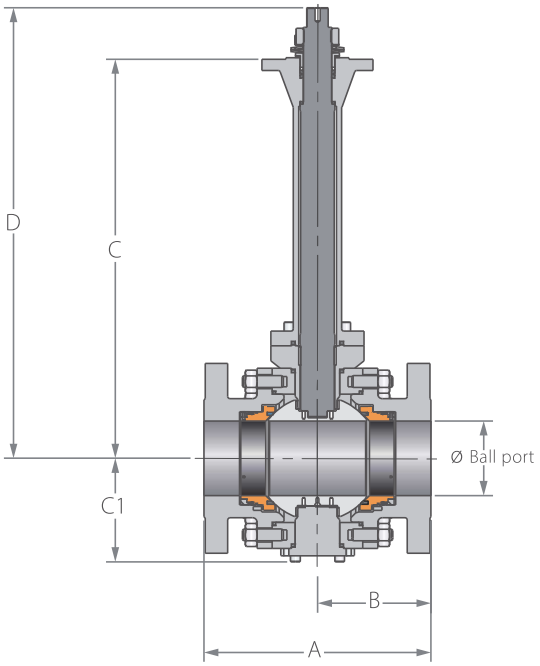

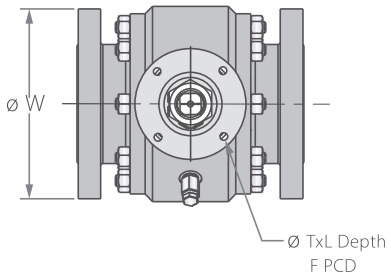

Preparation for actuation

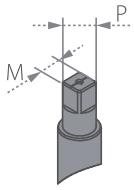

Std. port	Unit	Ball port		A		B		C	C1	D	W		M SQ	P SQ	F		TxL	Weight kg/ib		Kv / Cv	
		1500	2500	150	300	150	300				150	300						150	300	150	300
DN50	mm	49	42	368	451	184	225.5	500	127	569	215	235	28.45	35	(F12)	125	M12X15 (4 holes)	90	179	281	260
2"	inch	1.93	1.65	14.49	17.76	7.24	8.88	19.69	5	22.4	8.46	9.25	1.12	1.38		4.92		198	395	325	300
DN80	mm	74	62	470	578	235	289	550	201.5	619	265	305	28.45	35	(F12)	125	M12X15 (4 holes)	175	340	735	649
3"	inch	2.91	2.44	18.5	22.76	9.25	11.38	21.65	7.93	24.37	10.43	12.01	1.12	1.38		4.92		386	750	850	750
DN100	mm	100	87	546	673	273	336.5	600	198.5	712	310	355	35.9	43.5	(F14)	140	M16X20 (4 holes)	330	646	1384	1228
4"	inch	3.94	3.43	21.5	26.5	10.75	13.25	23.62	7.81	28.03	12.2	13.98	1.41	1.71		5.51		728	1424	1600	1420
DN150	mm	144	131	705	914	352.5	457	608	272	763	395	485	45.9	59	(F16)	165	M20x30 (4 holes)	627	1227	3590	2206
6"	inch	5.67	5.16	27.76	35.98	13.88	17.99	23.94	10.71	30.04	15.55	19.09	1.81	2.32		6.5		1382	2705	4150	2550

Cryogenic High Pressure Trunnion Mounted Ball 3 Piece

Valve dimensions

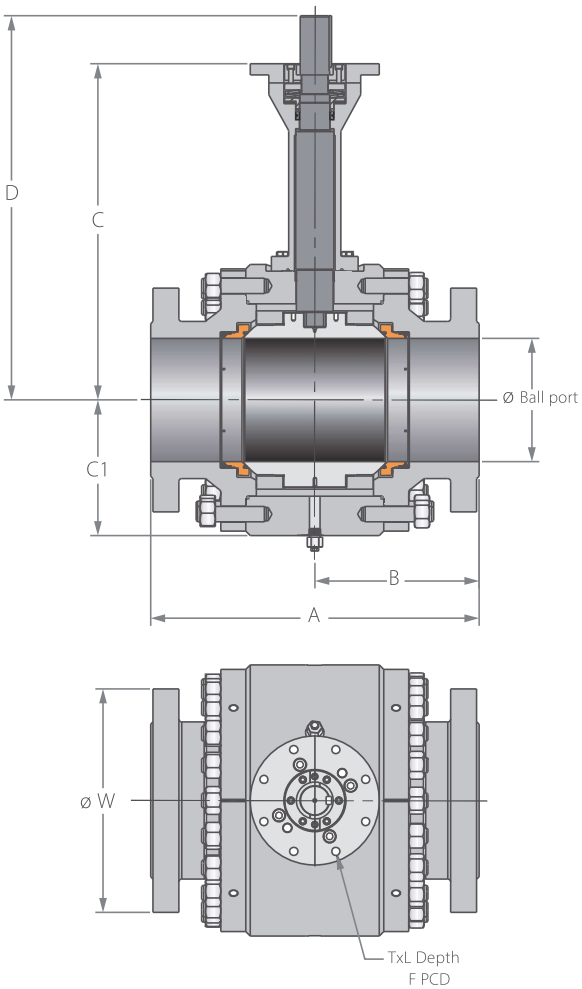

Preparation for actuation

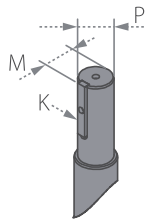

Std. port	Unit	Ball port		A		B		C	C1	D	W		P	M	K	F		TxL	Weight kg/ib		Kv / Cv	
		1500	2500	150	300	150	300				1500	2500							1500	2500	1500	2500
DN200	mm	201.0	179.0	832.0	1022.0	416.0	511.0	705.0	273.0	780.0	485.0	550.0	72.0	76.9	20.0	(F25)	254.0	18x25 (8 holes)	1000	2330	6963	4758
8"	inch	7.91	7.05	32.76	40.24	16.38	20.12	27.76	10.75	30.71	19.09	21.65	2.83	3.03	0.79		10.0		2205	5137	8050	5500
DN250	mm	239.0	223.0	991.0	1270.0	495.5	635.0	742.0	374.0	846.0	585.0	675.0	120.0	104.4	28.0	(F35)	356.0	32x45 (8 holes)	1900	3623	11418	7389
10"	inch	9.41	8.78	39.02	50.0	19.51	25.0	29.21	14.72	33.31	23.03	26.57	4.72	4.11	1.10		14.01		4189	7987	13200	8542
DN300	mm	287.0	265.0	1130.0	1422.0	565.0	711.0	800.0	512.0	930.0	675.0	760.0	98.0	104.4	28.0	(F40)	406.0	38x55 (8 holes)	2705	4875	16868	10508
12"	inch	11.30	10.43	44.49	55.98	22.24	27.99	31.5	20.16	36.61	26.57	29.92	3.86	4.11	1.10		15.98		5963	10747	19500	12148

C91 C92 C93 C94 C95 C96 2"-6"

Cryogenic Trunnion Mounted Ball 3 Piece

Components & materials

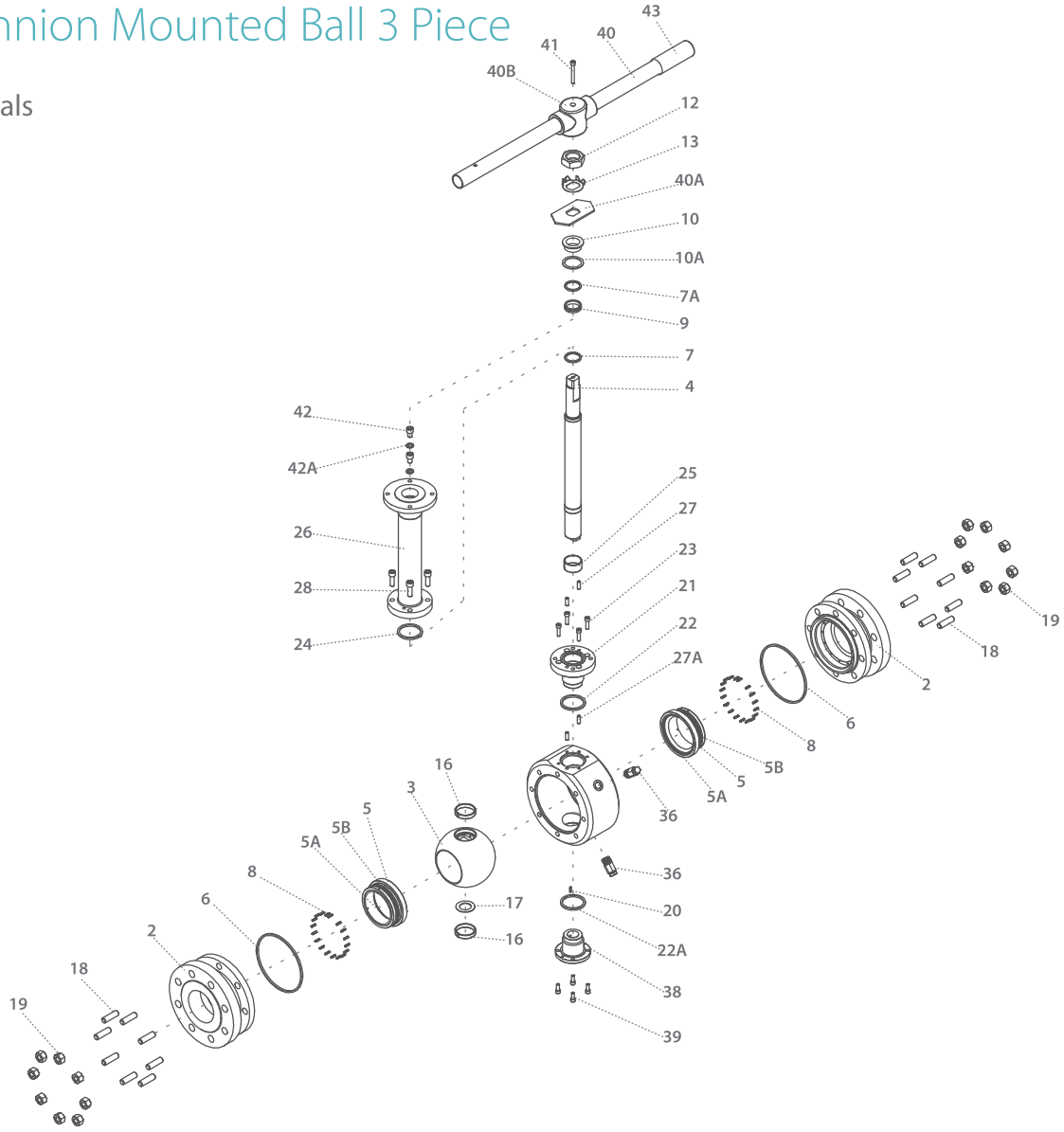

Item	Description	Material Spec. ASTM	Qty.
1	Body	Acc. Ordering Code	1
2	End	Acc. Ordering Code	2
3	Ball	Acc. Ordering Code	1
4	Stem	Acc. Ordering Code	1
5*	Seat	Acc. Ordering Code	2
5A*	Seat insert	Acc. Ordering Code	2
5B*	Seat seal	PTFE+Elgiloy, Graphite	2
6*	Body seal	Graphite	2
7*	Stem thrust seal	PCTFE	1
7A*	Anti-abrasion ring	PCTFE	1
8	Seat spring	Inconel 750	20-32
9*	Stem seal	HermetiX TFM	1
10	Follower	S. Steel	1
10A*	Slide bearing	S. Steel	1
12	Stem nut	S. Steel	1
13	Tab lock washer	S. Steel	1
16	Ball Bearing	PMT 316	2
17	Ball Thrust Washer	PMT 316	2
18	Body Stud	ASTM A320-B8M	8-40
19	Body Nut	A194 8M	8-40
20	Anti-static spring	S. Steel	1

Item	Description	Material Spec. ASTM	Qty.
21(1)	Gland Plate	A479 316/ 316L	1
22(1)*	Gland Plate Seal	Graphite	1
22A*	Outer trunnion seal	Graphite	1
23(1)	Gland Plate Bolts	ASTM A320-B8M	6-8
24*	Bonnet seal	Graphite	1
25	Stem bearing	PMT 316	1
26	Bonnet	S. Steel	1
27	Bonnet Pins	S. Steel	2
27A(1)	Gland Pins	S. Steel	2
28	Bonnet Bolts	ASTM A320-B8M	4-8
36	Plug drain/ vent valve	S. Steel	2
37	Tag (not shown)	S.Steel	1
38	Outer trunnion	A479 316	1
39	Outer trunnion bolts	ASTM A320-B8M	4-8
40	Pipe handle	S. Steel	1
40A	Stop plate	S. Steel	1
40B	Wrench head	S. Steel	1
41	Wrench head bolt	S. Steel	1
42	Stop bolt	S. Steel	2
42A	Spring washer	S. Steel	2
43	Sleeve	PCV	1

Cryogenic Trunnion Mounted Ball 3 Piece

Components & materials

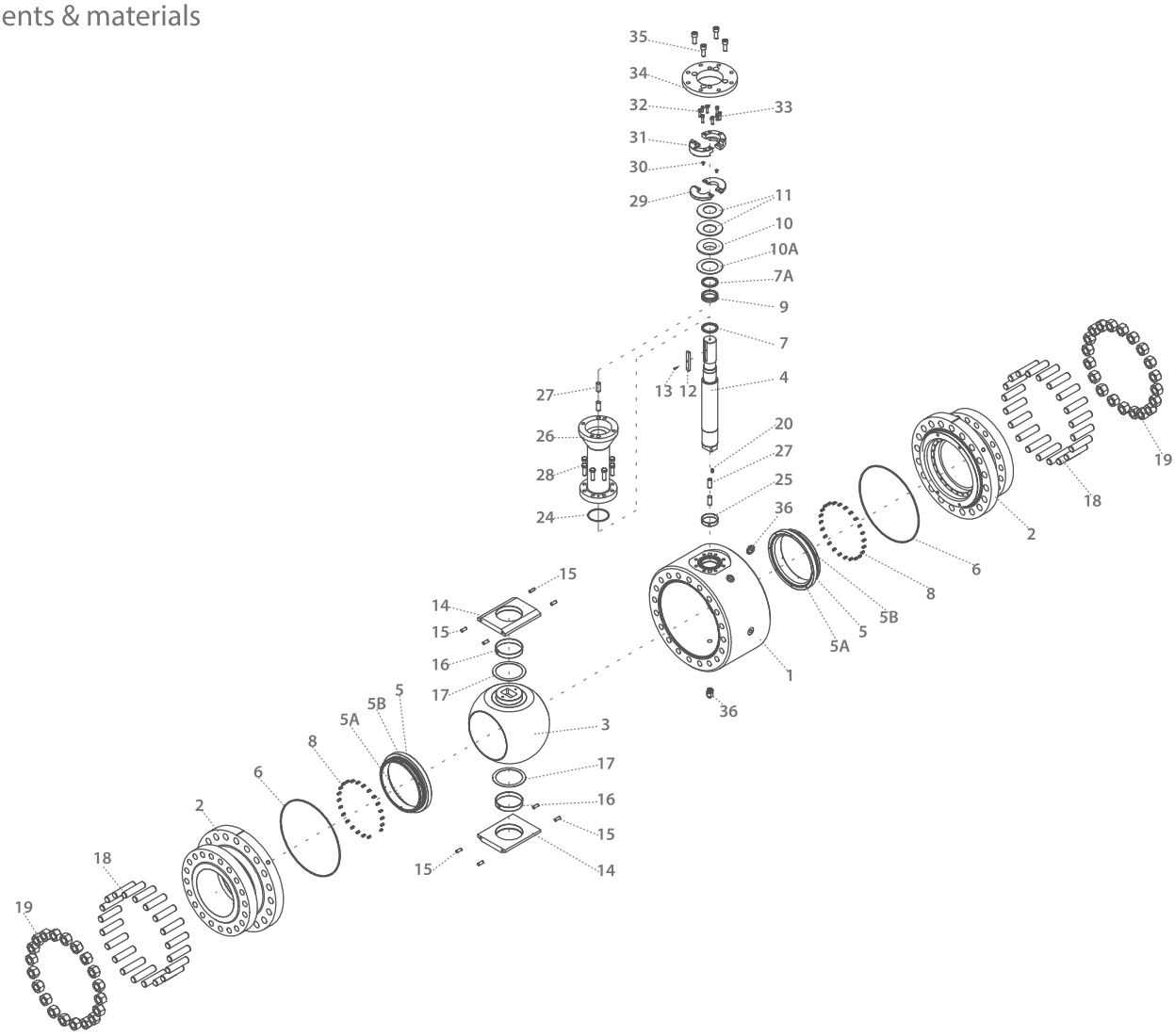

Item	Description	Material Spec. ASTM	Qty.
1	Body	Acc. Ordering Code	1
2	End	Acc. Ordering Code	2
3	Ball	Acc. Ordering Code	1
4	Stem	Acc. Ordering Code	1
5*	Seat	Acc. Ordering Code	2
5A*	Seat insert	Acc. Ordering Code	2
5B*	Seat seal	PTFE+Elgiloy, Graphite	2
6*	Body seal	Graphite	2
7*	Stem thrust seal	PCTFE	1
7A*	Anti-abrasion ring	PCTFE	1
8	Seat spring	Inconel 750	20-44
9*	Stem seal	HermetiX TFM	1
10	Follower	S. Steel	1
10A*	Slide bearing	S. Steel	1
11	Disc spring	S. Steel	2
12	Stem key	S. Steel	1
13	Stem key bolt	S. Steel	1
14	Trunnion plate	A479 316	2
15	Trunnion plate Pin	S. Steel	8

Item	Description	Material Spec. ASTM	Qty.
16	Ball Bearing	PMT 316	2
17	Ball Thrust Washer	PMT 316	2
18	Body Stud	ASTM A320-B8M	16-40
19	Body Nut	A194 8M	16-40
20	Anti-static spring	S. Steel	1
24*	Bonnet seal	Graphite	1
25	Stem bearing	PMT 316	1
26	Bonnet	S. Steel	1
27	Bonnet Pins	S. Steel	4-6
28	Bonnet Bolts	ASTM A320-B8M	4-8
29	Bot Follower	A479 316	2
30	Bot Follower bolt	ASTM A320-B8M	2
31	Top Follower	A479 316	2
32	Top Follower drive bolt	ASTM A320-B8M	6-8
33	Top Follower bolt	ASTM A320-B8M	2
34	Iso Plate	A479 316	1
35	Iso Plate bolt	ASTM A320-B8M	4-8
36	Plug drain/ vent valve	S. Steel	2
37	Tag (not shown)	S.Steel	2

C91 C92 C93 C94 C95 C96

Cryogenic Trunnion Mounted Ball 3 Piece - Ordering Code System

"Mandatory option" options are marked with green background | "Standard offer" options are marked with light green background

1	2	3	4	5	6	7	8	9	10	11	12	13	14	15	16	17	18	19	20	21	22	23	24	.	.	30
6	0		F	C	B	9	3	W	-	6	M	6	5	C	A	G	/	6	0	0						
Size		Features				Series		Design		Body & ends	Stem	Ball & seat ring	Seat feature	Seat insert	Inner Seal	Outer Seal		End connection				Special features				

Size (1-2)		
Code	inch	mm
20	2"	50
30	3"	80
40	4"	100
60	6"	150
80	8"	200
A0	10"	250
A2	12"	300
A4	14"	350

for C91, C92, C93, C94 series only

Features (3-6)	
F	Fire safe
C	Cryogenic design
B	Full port

Series (7-8)	
91	3 Piece design #150 (PN20)
92	3 Piece design #300 (PN50)
93	3 Piece design #600 (PN100)
94	3 Piece design #900 (PN150)
95	3 Piece High pressure #1500 (PN250)
96	3 Piece High pressure #2500 (PN420)

Design (9)	
W	Total HermetiX Integrity package

Body & ends material (11)	
6	S. Steel

Stem material (12)	
M	High Strength S. Steel

Ball & seat ring material (13)	
6	S. Steel

Seat feature (14)	
S	Single Piston Effect (SPE) (API 6D DBB)

Seat insert (15)	
C	PCTFE

Inner Seal (16)	
A	TFM

Outer Seal (17)	
G	Graphite

End Connection (19-22)	
Flanged Raised face	
150	ASME B16.5 #150 RF
300	ASME B16.5 #300 RF
600	ASME B16.5 #600 RF
900	ASME B16.5 #900 RF
1500	ASME B16.5 #1500 RF
2500	ASME B16.5 #2500 RF
PN16	DIN EN 1092-1 PN16
PN40	DIN EN 1092-1 PN40
PN63	DIN EN 1092-1 PN63
PN100	DIN EN 1092-1 PN100
PN160	DIN EN 1092-1 PN160
PN250	DIN EN 1092-1 PN250
PN320	DIN EN 1092-1 PN320
PN400	DIN EN 1092-1 PN400
Flanged RTJ	
600RTJ	ASME B16.5 #600 RTJ
900RTJ	ASME B16.5 #900 RTJ
1500RTJ	ASME B16.5 #1500 RTJ
2500RTJ	ASME B16.5 #2500 RTJ
Welded ends	
XBW*	Extended buttweld sch 40
XBW80	Extended buttweld sch 80
XBW160	Extended buttweld sch 160

C81 C82 C83

Cryogenic Valves

TRUNNION

2 PIECE

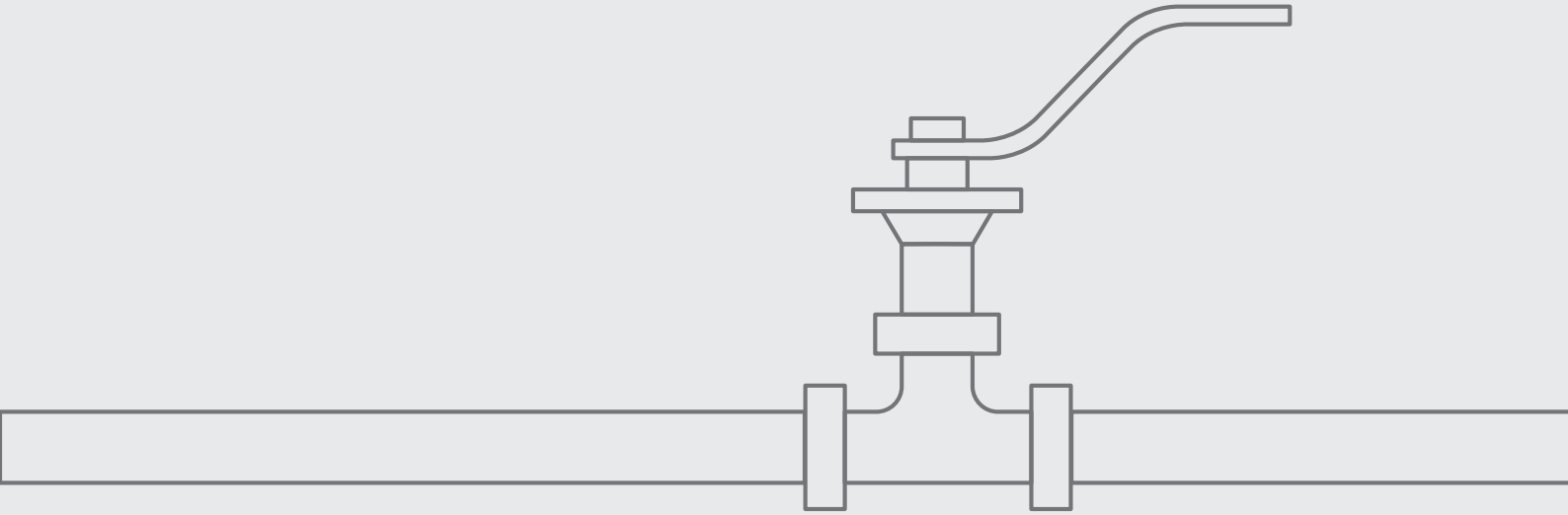

C81 C82 2"-6" | DN50-DN150 | CLASS 150/300

Cryogenic Trunnion Mounted Ball 2 Piece

Valve dimensions

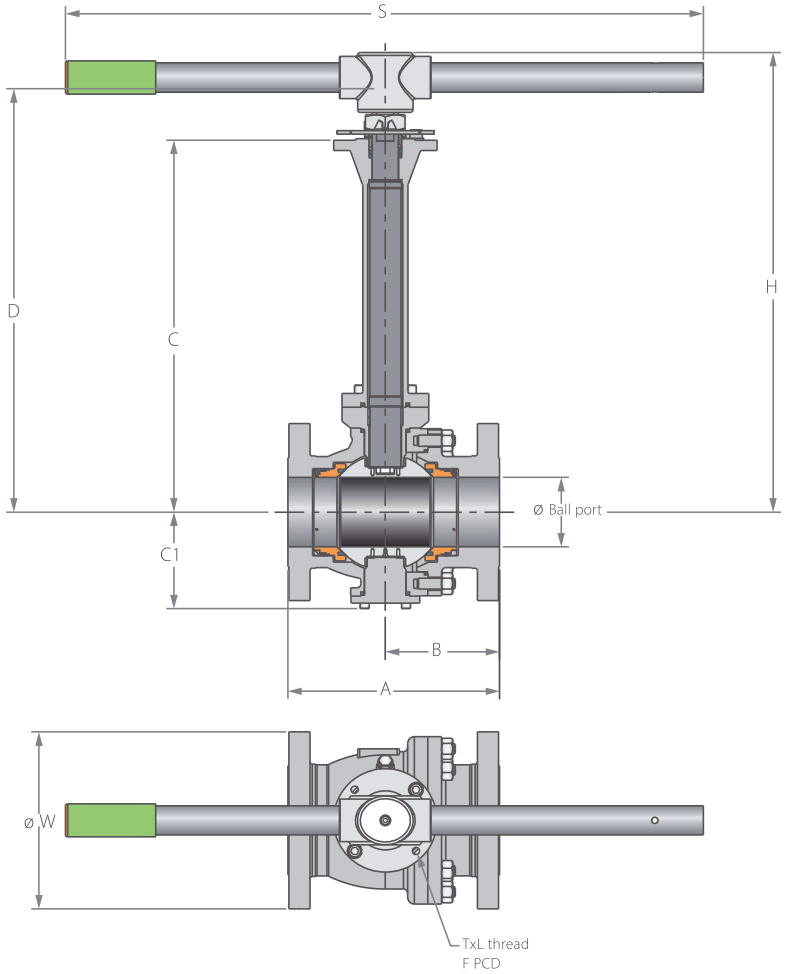

Preparation for actuation

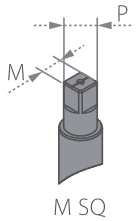

Full port	Unit	Ball port	A		B		C	C1	D	W		M SQ	P SQ	H	S	F		TxL	Weight kg/ib		Kv / Cv	
			150	300	150	300				150	300								150	300	150	300
DN50	mm	49	178	216	89	113.5	500	94	546.5	150	165	18.9	22.70	525.8	401	(F10)	102	M10X15 (4 holes)	24	27	400	363
2"	inch	1.93	7.01	8.5	3.5	4.47	19.69	3.7	21.52	5.91	6.50	0.74	0.89	20.70	15.79		4.02		53	60	463	420
DN80	mm	74	203	283	101.5	154	550	117	619.1	190	210	28.45	35.20	638.6	610	(F12)	125	M12X15 (4 holes)	42	53	1125	952
3"	inch	2.91	7.99	11.14	4	6.06	21.65	4.61	24.37	7.48	8.27	1.12	1.39	25.14	24.02		4.92		93	117	1300	1100
DN100	mm	100	229	305	114.5	164.5	600	139	669.1	230	255	28.45	35.20	662.6	916	(F12)	125	M12X15 (4 holes)	64	76	2154	1860
4"	inch	3.94	9.02	12	4.51	6.48	23.62	5.47	26.34	9.06	10.04	1.12	1.39	26.09	36.06		4.92		141	168	2490	2150
DN150	mm	150	394	403	209.1	207.6	607	191	719.6	280	320	35.9	43.50	777.1	916	(F14)	140	M16X20 (4 holes)	165	176	4723	4628
6"	inch	5.91	15.51	15.87	8.23	8.17	23.9	7.52	28.33	11.02	12.6	1.41	1.71	30.59	36.06		5.51		364	388	5460	5350

Cryogenic Trunnion Mounted Ball 2 Piece

Valve dimensions

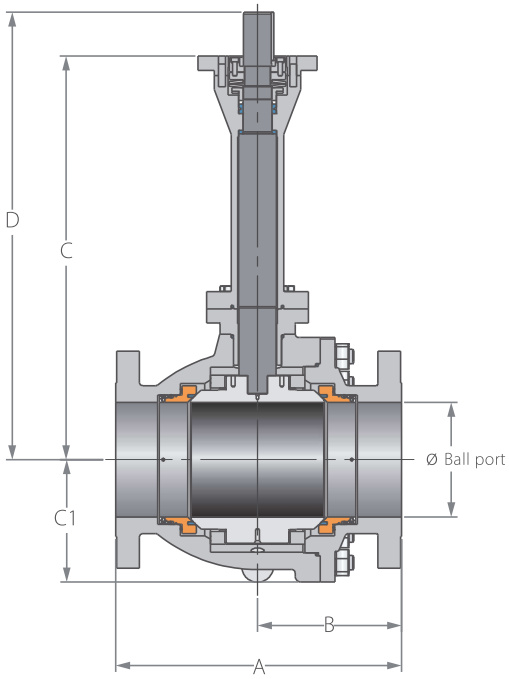

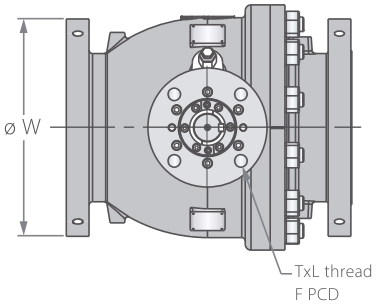

Preparation for actuation

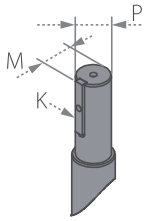

Full port	Unit	Ball port	A		B		C	C1	D	W		P	M	K	F		TxL	Weight kg/ib		Kv / Cv	
			150	300	150	300				150	300							150	300	150	300
DN200	mm	201.0	457.0	502.0	228.5	253.0	708.0	215.0	785.0	345.0	380.0	50.0	54.0	14.0	(F16)	165.0	22x25 (4 holes)	254	292	9273	8737
8"	inch	7.91	17.99	19.76	9.0	9.96	27.87	8.46	30.91	13.58	14.96	1.97	2.13	0.55		6.50		560	644	10720	10100
DN250	mm	252.0	533.0	568.0	270.0	287.5	713.3	260.0	790.4	405.0	445.0	50.0	54.0	14.0	(F25)	254.0	18x25 (8 holes)	404	474	15224	14792
10"	inch	9.92	20.98	22.36	10.63	11.32	28.08	10.24	31.12	15.94	17.52	1.97	2.13	0.55		10.0		891	1045	17600	17100
DN300	mm	303.0	610.0	648.0	298.0	313.0	800.0	300.0	880.50	485.0	520.0	60.0	63.5	18.0	(F25)	254.0	18x25 (8 holes)	594	671	23096	22404
12"	inch	11.93	24.02	25.51	11.73	12.32	31.5	11.81	34.67	19.09	20.47	2.36	2.5	0.71		10.0		1310	1479	26700	25900

Cryogenic Trunnion Mounted Ball 2 Piece

Valve dimensions

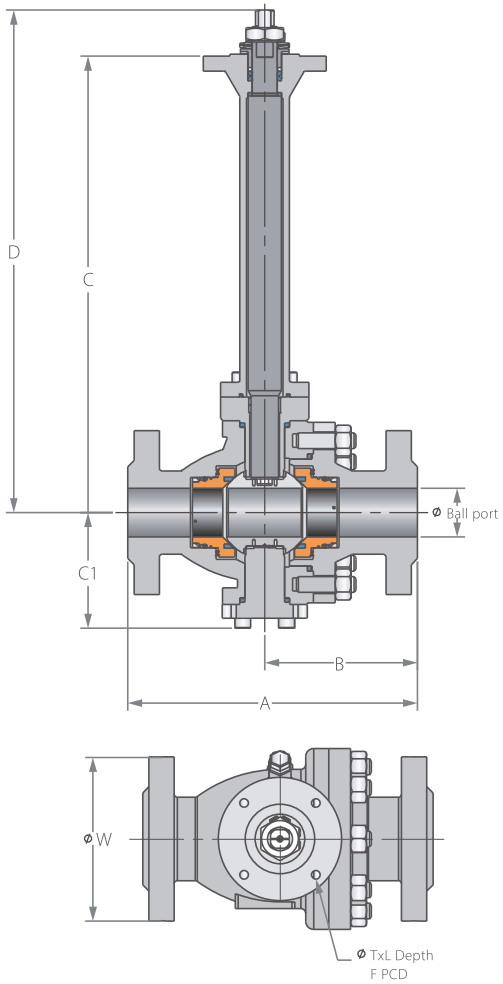

Preparation for actuation

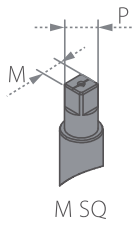

Full port	Unit	Ball port	A	B	C	C1	D	W	M SQ	P SQ	F		TxL	Weight kg/ib	Kv / Cv
DN50	mm	49	292	131	500	119	547.5	165	18.9	22.7	(F10)	102	M10X15 (4 holes)	43	329
2"	inch	1.93	11.5	5.16	19.69	4.69	21.56	6.5	0.74	0.89		4.02		95	380
DN80	mm	74	356	161	550	160	617	210	28.45	35.2	(F12)	125	M12X15 (4 holes)	84.5	874
3"	inch	2.91	14.02	6.34	21.65	6.3	24.29	8.27	1.12	1.39		4.92		186	1010
DN100	mm	100	432	216	600	184	712.6	275	35.9	43.5	(F14)	140	M16X20 (4 holes)	139	1557
4"	inch	3.94	17.01	8.50	23.62	7.24	28.06	10.83	1.41	1.71		5.51		306	1800
DN150	mm	150	559	278	624.5	214.5	737.1	355	35.9	43.5	(F14)	140	M16X20 (4 holes)	275	3893
6"	inch	5.91	22.01	10.94	24.59	8.44	29.02	13.98	1.41	1.71		5.51		606	4500

Cryogenic Trunnion Mounted Ball 2 Piece

Valve dimensions

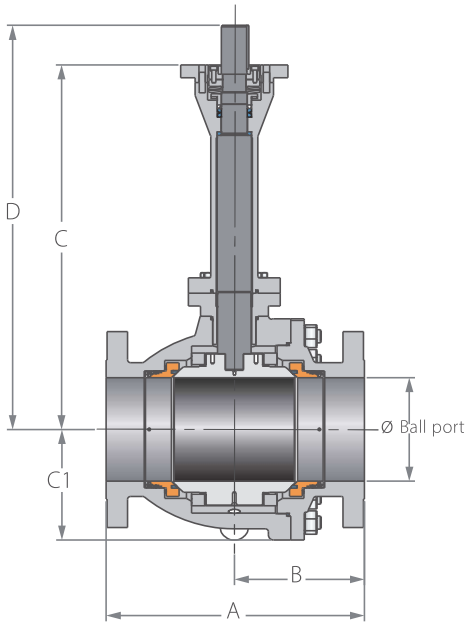

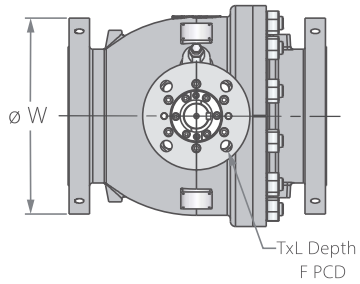

Preparation for actuation

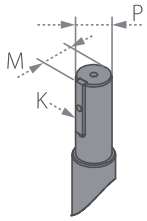

Full port	Unit	Ball port	A	B	C	C1	D	W	P	M	K	F		TxL	Weight kg/ib	Kv / Cv
DN200	mm	201.0	660.0	330.0	696.0	263.0	774.0	420.0	60.0	63.5	14.0	(F25)	254.0	18x25 (8 holes)	475	7742
8"	inch	7.91	25.98	12.99	27.4	10.35	30.47	16.54	2.36	2.5	0.55		10.0		1047	8950
DN250	mm	252.0	787.0	400.0	739.0	310.0	817.0	510.0	60.0	63.50	14.0	(F25)	254.0	18x35 (8 holes)	725	12543
10"	inch	9.92	30.98	15.75	29.09	12.2	32.17	20.08	2.36	2.50	0.55		10.0		1598	14500
DN300	mm	303.0	838.0	419.0	800.0	344.0	915.0	560.0	72.0	76.5	20.0	(F25)	254.0	18x35 (8 holes)	928	19809
12"	inch	11.93	32.99	16.50	31.50	13.54	36.02	22.05	2.83	3.01	0.79		10.0		2046	22900

C81 C82 C83 2"-6"

Cryogenic Trunnion Mounted Ball 2 Piece

Components & materials

Item	Description	Material Spec. ASTM	Qty.
1	Body	Acc. Ordering Code	1
2	End	Acc. Ordering Code	1
3	Ball	Acc. Ordering Code	1
4	Stem	Acc. Ordering Code	1
5*	Seat	Acc. Ordering Code	2
5A*	Seat insert	Acc. Ordering Code	2
5B*	Seat seal	PTFE+Elgiloy, Graphite	2
6*	Body seal	Graphite	1
7*	Stem thrust seal	PCTFE	1
7A*	Anti-abrasion ring	PCTFE	1
8	Seat spring	Inconel 750	20-32
9 *	Stem seal	HermetiX TFM	1
10	Follower	S. Steel	1
10A*	Slide bearing	S. Steel	1
12	Stem nut	S. Steel	1
13	Tab lock washer	S. Steel	1
16	Ball Bearing	PMT 316	2
17	Ball Thrust Washer	PMT 316	1
18	Body Stud	ASTM A320-B8M	4-20
19	Body Nut	A194 8M	4-20
20	Anti-static spring	S. Steel	1
21	Gland Plate	A479 316/ 316L	1
22*	Gland Plate Seal	Graphite	1
22A*	Outer trunnion seal	Graphite	1
23	Gland Plate Bolts	ASTM A320-B8M	4-8
24*	Bonnet seal	Graphite	1
25	Stem bearing	PMT 316	1
26	Bonnet	S. Steel	1
27	Bonnet Pins	S. Steel	2
27A	Gland Pins	S. Steel	2
28	Bonnet Bolts	ASTM A320-B8M	4-8
36	Plug drain/ vent valve	S. Steel	2
37	Tag (not shown)	S.Steel	1
38	Outer trunnion	A479 316	1
39	Outer trunnion bolts	ASTM A320-B8M	4-8
40	Pipe handle	S. Steel	1
40A	Stop plate	S. Steel	1
40B	Wrench head	S. Steel	1
41	Wrench head bolt	S. Steel	1
42	Stop bolt	S. Steel	2
42A	Spring washer	S. Steel	2
43	Sleeve	PCV	1

* Repair kit components

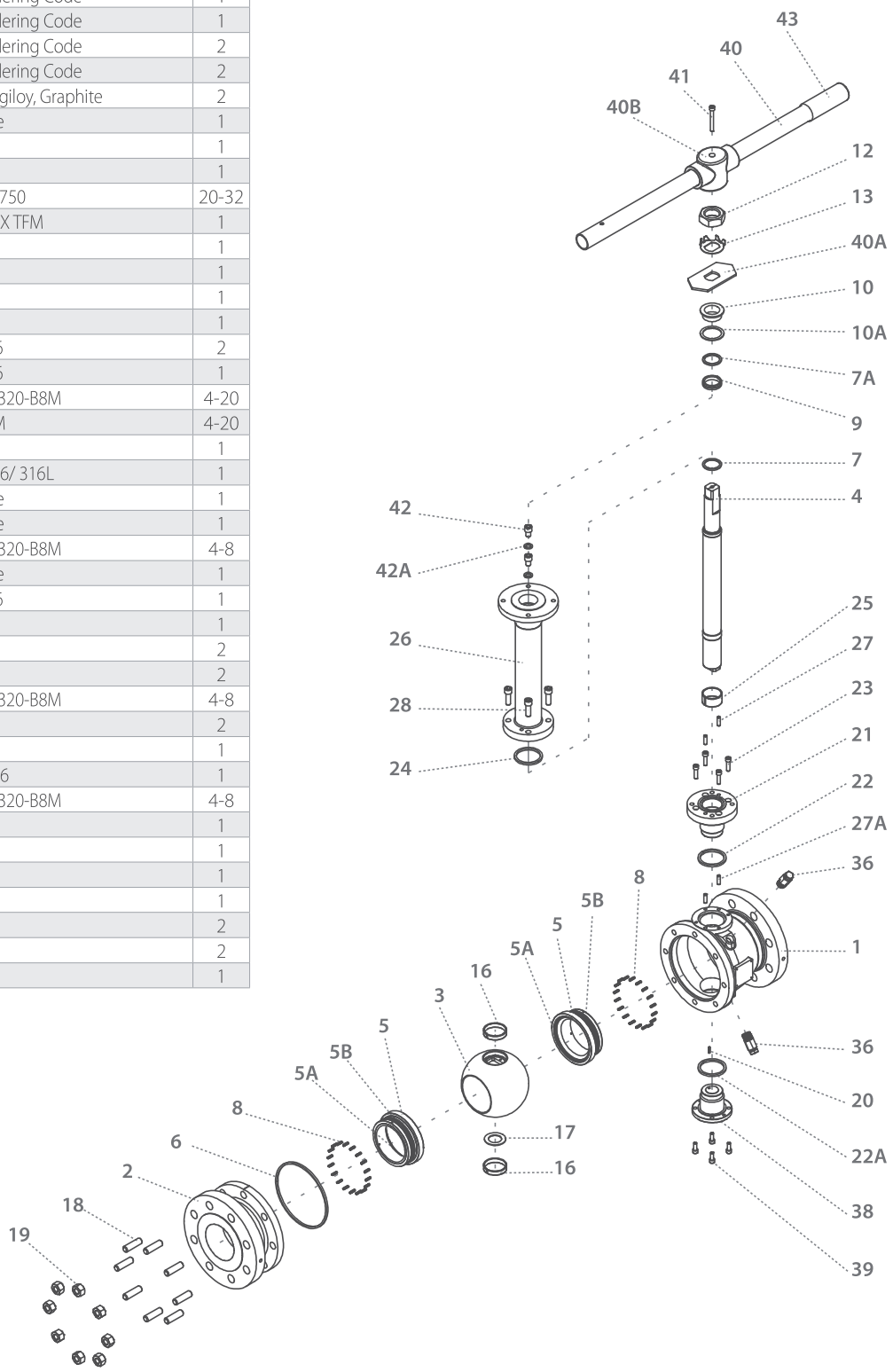

C81 C82 C83 8"-12"

Cryogenic Trunnion Mounted Ball 2 Piece

Components & materials

Item	Description	Material Spec. ASTM	Qty.
1	Body	Acc. Ordering Code	1
2	End	Acc. Ordering Code	1
3	Ball	Acc. Ordering Code	1
4	Stem	Acc. Ordering Code	1
5*	Seat	Acc. Ordering Code	2
5A*	Seat insert	Acc. Ordering Code	2
5B*	Seat seal	PTFE+Elgiloy, Graphite	2
6*	Body seal	Graphite	1
7*	Stem thrust seal	PCTFE	1
7A*	Anti-abrasion ring	PCTFE	1
8	Seat spring	Inconel X750	20-44
9*	Stem seal	HermetiX TFM	1
10	Follower	S. Steel	1
10A	Slide bearing	S. Steel	1
11	Disc spring	S. Steel	2
12	Stem key	S. Steel	1
13	Stem key bolt	S. Steel	1
14	Trunnion plate	A479 316	2
15	Trunnion plate Pin	S. Steel	8
16	Ball Bearing	PMT 316	2
17	Ball Thrust Washer	PMT 316	2
18	Body Stud	ASTM A320-B8M	8-20
19	Body Nut	A194 8M	8-20
20	Anti-static spring	S. Steel	1
21(1)	Gland Plate	A479 316	1
22(1)*	Gland Plate Seal	Graphite	1
23(1)	Gland Plate Bolts	ASTM A320-B8M	6-8
24*	Bonnet seal	Graphite	1
25	Stem bearing	PMT 316	1
26	Bonnet	S. Steel	1
27	Bonnet Pin	S. Steel	4-6
28	Bonnet Bolts	ASTM A320-B8M	4-8
29	Bot Follower	A479 316	2
30	Bot Follower bolt	ASTM A320-B8M	2
31	Top Follower	A479 316	2
32	Top Follower drive bolt	ASTM A320-B8M	6-8
33	Top Follower bolt	ASTM A320-B8M	2
34	Iso Plate	A479 316	1
35	Iso Plate bolt	ASTM A320-B8M	4-8
36	Plug drain/ vent valve	S. Steel	2
37	Tag (not shown)	S.Steel	1-2

* Repair kit components

(1) At 8" size

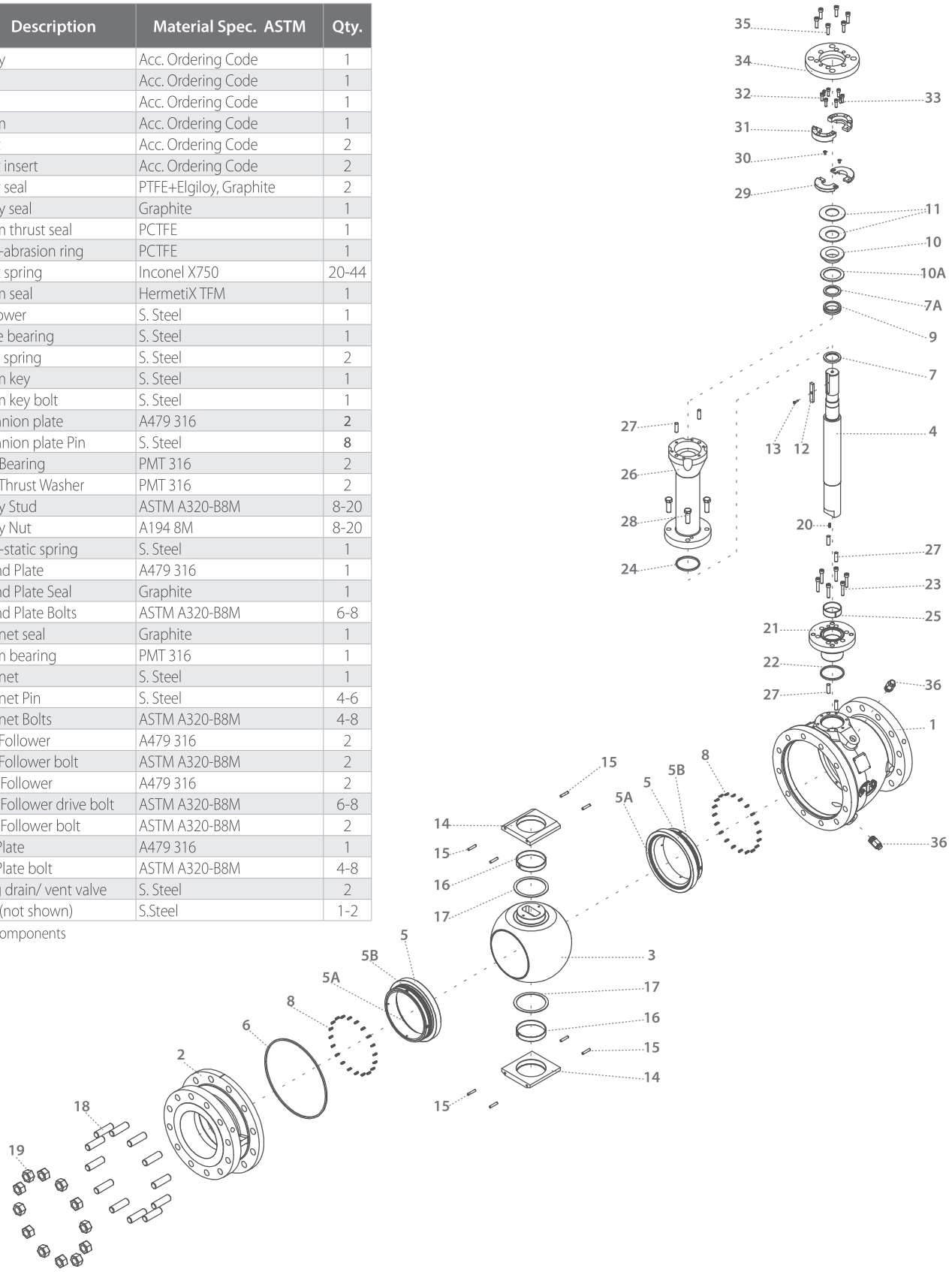

C81 C82 C83

Cryogenic Trunnion Mounted Ball 2 Piece - Ordering Code System

"Mandatory option" options are marked with green background | "Standard offer" options are marked with light green background

1	2	3	4	5	6	7	8	9	10	11	12	13	14	15	16	17	18	19	20	21	22	23	24	.	.	30
8	0		F	C	B	8	1	W	-	6	M	6	5	C	A	G	/	1	5	0						
Size		Features				Series		Design		Body & ends	Stem	Ball & seat ring	Seat feature	Seat insert	Inner Seal	Outer Seal		End connection				Special features				

Size (1-2)		
Code	inch	mm
20	2"	50
30	3"	80
40	4"	100
60	6"	150
80	8"	200
A0	10"	250
A2	12"	300

Features (3-6)	
F	Fire safe
C	Cryogenic design
B	Full port

Series (7-8)	
81	ASME B16.5 #150 Flanged RF
82	ASME B16.5 #300 Flanged RF
83	ASME B16.5 #600 Flanged RF

Design (9)	
W	Total HermetiX Integrity package

Body & ends material (11)	
6	S. Steel

Stem material (12)	
M	High Strength S. Steel

Ball & seat ring material (13)	
6	S. Steel

Seat feature (14)	
S	Single Piston Effect (SPE) (API 6D DBB)

Seat insert (15)	
C	PCTFE

Inner Seal (16)	
A	TFM

Outer Seal (17)	
G	Graphite

End Connection (19-22)	
150	ASME B16.5 #150 RF
300	ASME B16.5 #300 RF
600	ASME B16.5 #600 RF

C47 C26

Cryogenic Valves

FLOATING BALL

3 PIECE

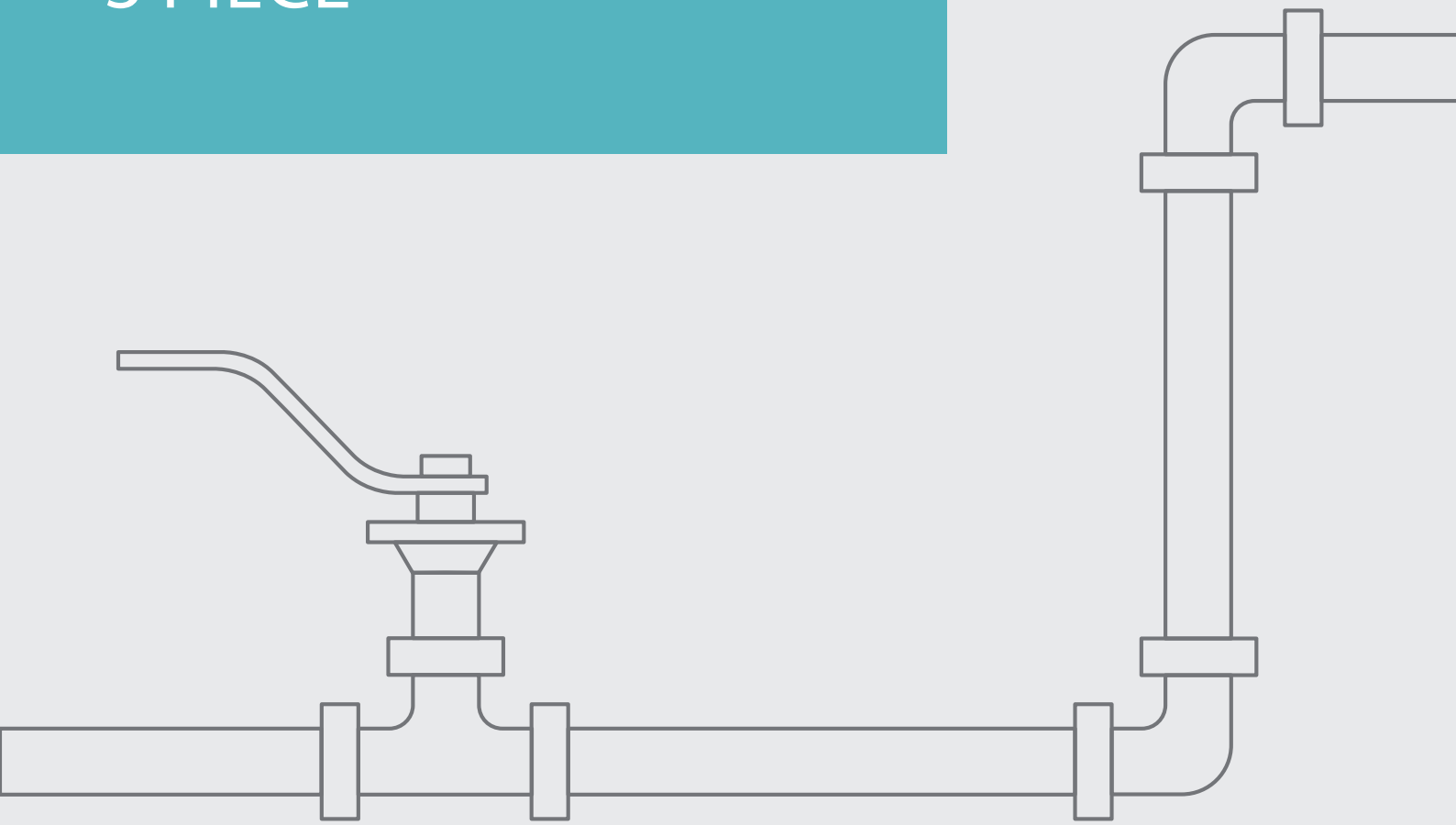

C47 C47-BD 1/4"-2" | DN8-DN50 | CLASS 600 (-BD CLASS 300)

Cryogenic Floating Ball 3 Piece; BD - Bidirectional | PATENTED |

Valve dimensions

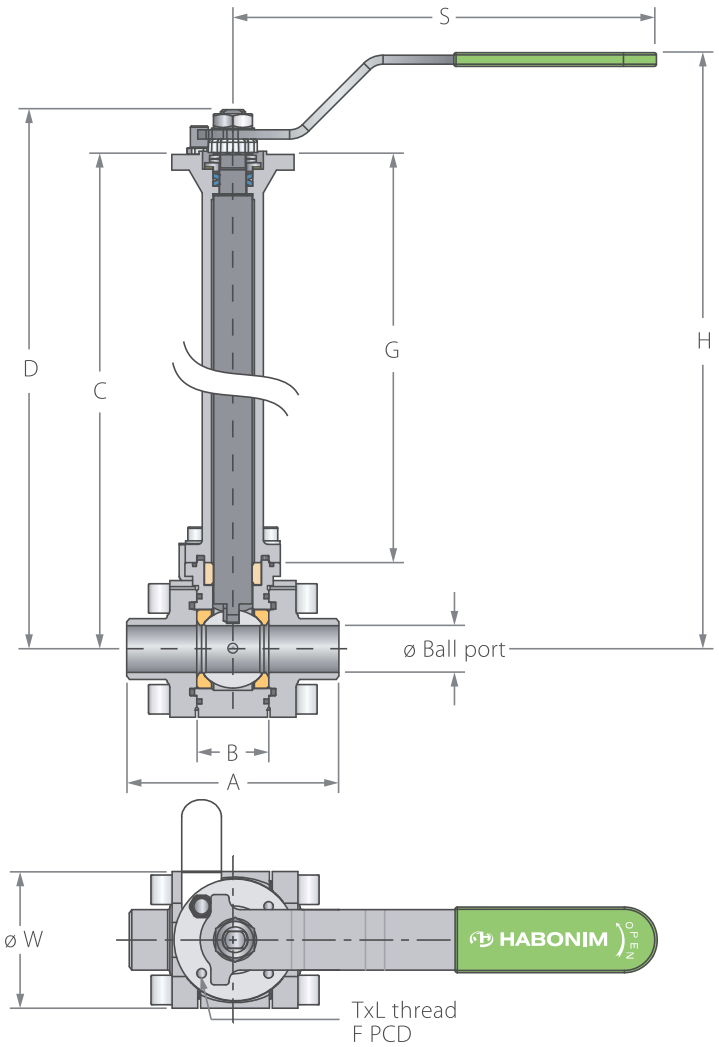

Bidirectional Cryogenic floating ball Valve

- Cryogenic floating ball valves with bidirectional sealing capability allows it to be used on a bidirectional loading and offloading single pipeline as well as a shutoff valve for a storage tank, developing back pressure to the downstream side while empty without upstream line pressure.
- This valves are equipped with all the benefits of the standard cryogenic ball valve on top of the simplicity and flow capabilities of a floating ball design.
- Full Δp
- ASME Class 300
- Special "Piston Effect" at seat design to prevent pressure buildup in the cavity.

Preparation for actuation

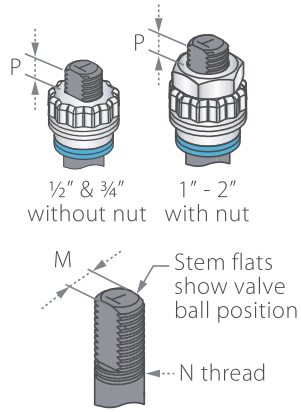

Valve Face To Face sizes are according to Habonim catalog data only, for Extended-weald/Flanged/Tri-clamp end see Face To Face sizes page.

Std. port	Full port	Unit	Ball port	A	B	Standard design				6.0" bonnet				S	W	M	N	P	F		TxL	Weight kg/lb		Kv
						C	D	G	H	C	D	G	H									Std.	6.0"	Cv
	DN8	mm	11.15	65.8	20.6	333	341.9	304	366	181.4	190.3	152.4	214.4	150.0	4.6	5.5	3/8" UNF	7.20	(F03)	36.0	M5X7	1.60	1.28	2.6
	1/4"	inch	0.44	2.59	0.81	13.11	13.46	11.97	14.41	7.14	7.49	6.0	8.44	5.91	1.81	0.22		0.28		1.42		3.53	2.82	3.0
DN15	DN10	mm	11.15	65.8	20.6	333.0	341.9	304.0	366.0	181.4	190.3	152.4	214.4	150.0	46.0	5.5	3/8" UNF	7.20	(F03)	36.0	M5X7	1.6	1.28	7
1/2"	3/8"	inch	0.44	2.59	0.81	13.11	13.46	11.97	14.41	7.14	7.49	6.0	8.44	5.91	1.81	0.22		0.28		1.42		3.53	2.82	8
DN20	DN15	mm	14.3	70.55	24.55	335.4	344.3	304.0	368.0	183.8	192.7	152.4	216.4	150.0	52.0	5.5	3/8" UNF	7.20	(F03)	36.0	M5X7	1.8	1.48	10
3/4"	1/2"	inch	0.56	2.78	0.97	13.2	13.56	11.97	14.49	7.24	7.59	6.0	8.52	5.91	2.05	0.22		0.28		1.42		3.97	3.26	12
DN25	DN20	mm	20.6	93.65	31.75	342.15	359.65	304.0	383.0	190.55	208.05	152.4	231.4	187.0	60.5	7.54	7/16" UNF	7.20	(F04)	42.0	M5X7	3.0	2.65	28
1"	3/4"	inch	0.81	3.69	1.25	13.47	14.16	11.97	15.08	7.50	8.19	6.0	9.11	7.32	2.38	0.3		0.28		1.65		6.61	5.84	32
DN32	DN25	mm	25.4	108.25	41.25	346.65	364.15	304.0	388.0	195.05	212.55	152.4	236.4	187.0	69.0	7.54	7/16" UNF	7.2	(F04)	42.0	M5X10	3.7	3.35	37
1 1/4"	1"	inch	1.0	4.25	1.62	13.65	14.34	11.97	15.28	7.68	8.37	6.0	9.31	7.32	2.72	0.30		0.28		1.65		8.16	7.39	43
DN40	DN32	mm	31.8	115.45	48.25	347.55	377.05	304.0	400.0	195.95	225.45	152.40	248.40	237.0	79.20	8.71	9/16" UNF	8.0	(F05)	50.0	M6X8	5.2	4.65	70
1 1/2"	1 1/4"	inch	1.25	4.55	1.90	13.68	14.84	11.97	15.75	7.71	8.88	6.0	9.78	9.29	3.12	0.34		0.31		1.97		11.46	10.25	81
DN50	DN40	mm	38.1	127.10	56.3	352.25	381.75	304.0	405.0	200.65	230.15	152.4	253.4	237.0	90.7	8.71	9/16" UNF	8.5	(F05)	50.0	M6X8	6.1	5.53	103
2"	1 1/2"	inch	1.5	5.0	2.22	13.87	15.03	11.97	15.94	7.9	9.06	6.0	9.98	9.29	3.57	0.34		0.33		1.97		13.45	12.19	208

Components & materials

Note: for C47

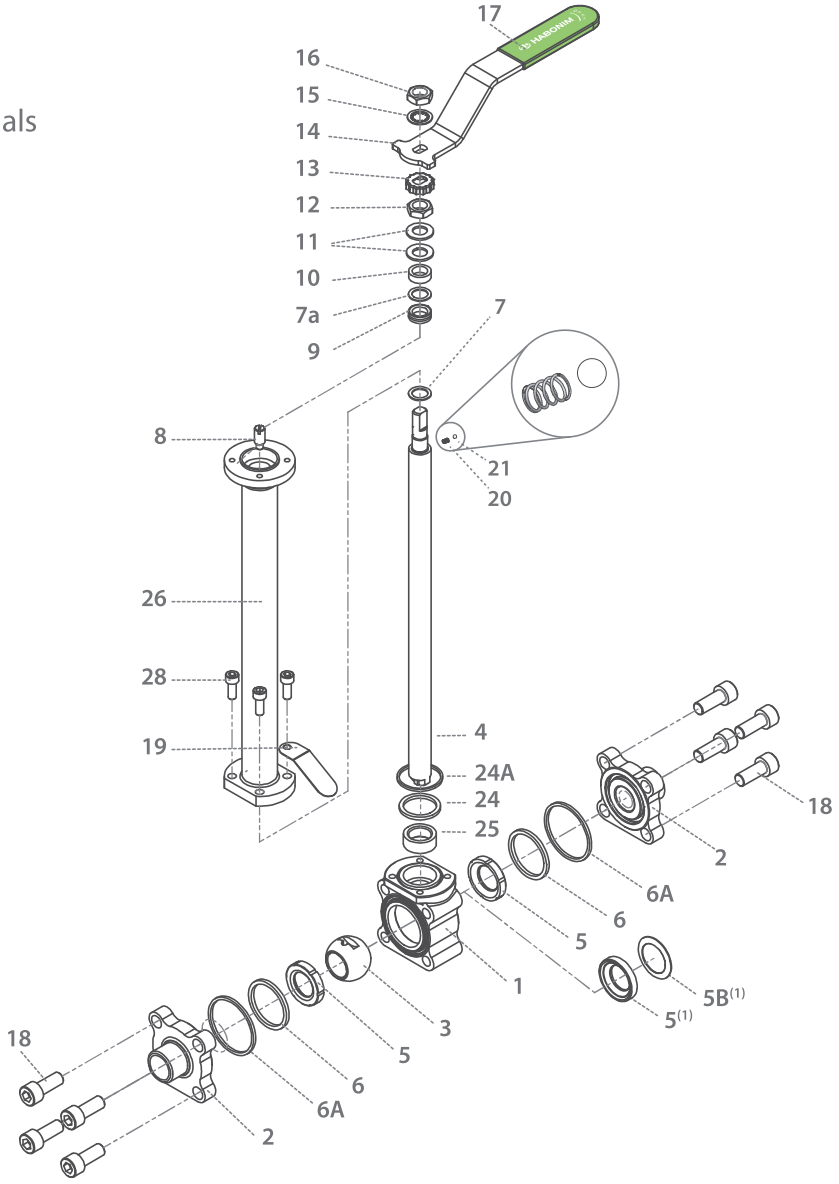

Item	Description	Material specifications	Qty.
1	Body	Acc. Ordering Code	1
2	End	Acc. Ordering Code	2
3	Ball	Acc. Ordering Code	1
4	Stem	Acc. Ordering Code	1
5*	Seat	Acc. Ordering Code	2
5B	Upstream seat spring	Inconel 718	1
6*	Inner seal	TFM	2
6A*	Outer seal	Acc. Ordering Code	2
7*	Stem thrust seal	PCTFE	1
7a*	Anti-abrasion ring	PCTFE	1
8	Stop pin	S. Steel	1
9*	Stem seal	TFM	1
10	Follower	S. Steel	1
10A	Slide bearing	S. Steel	1
11	Disc spring	S. Steel	2
12	Stem nut	S. Steel	1
13	Locking clip	S. Steel	1

Item	Description	Material specifications	Qty.
14	Handle	S. Steel	1
15	Serrated washer	S. Steel	1
16	Handle nut	S. Steel	1
17	Sleeve	PVC	1
18	Body bolt	S. Steel	8
20	Anti-static spring	S. Steel	1
21	Anti-static plunger	S. Steel	1
22	Arrow flow	S. Steel	2
23	Tag (not shown)	S. Steel	1
24*	Bonnet inner seal	TFM	1
24A*	Bonnet outer seal	Acc. Ordering Code	1
25*	Stem bearing	PTFE	1
26	Bonnet	S. Steel	1
28	Bolt	S. Steel	4
30	Dog tag	S. Steel	1

* Repair kit components

(1) Optional Dynemic seat design

Cryogenic Floating Ball 3 Piece ; BD - Bidirectional

| PATENTED |

Valve dimensions

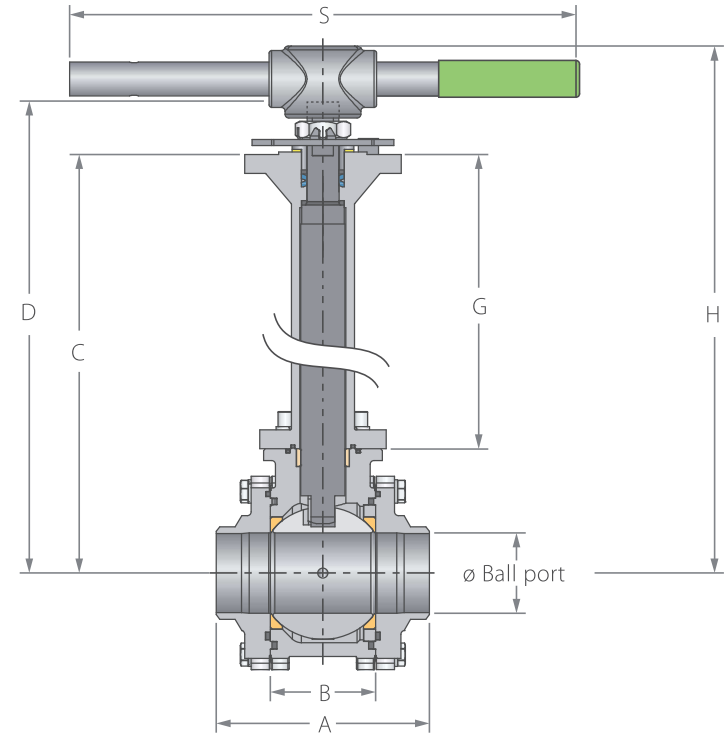

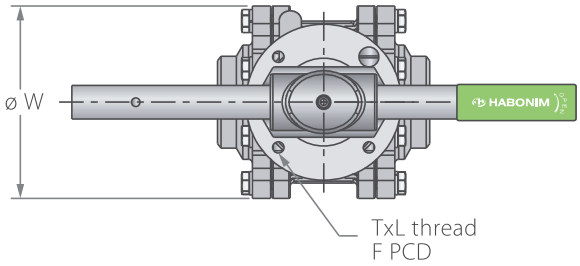

Bidirectional Cryogenic floating ball Valve

- Cryogenic floating ball valves with bidirectional full Δp sealing capability allows it to be used on a bidirectional loading and offloading single pipeline as well as a shutoff valve for a storage tank, developing back pressure to the downstream side while empty without upstream line pressure.
- This valves are equipped with all the benefits of the standard cryogenic ball valve on top of the simplicity and flow capabilities of a floating ball design.
- Full Δp
- ASME Class 150
- Special "Piston Effect" at seat design to prevent pressure buildup in the cavity.

Preparation for actuation

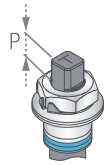

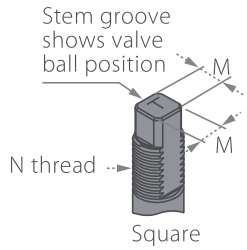

Valve Face To Face sizes are according to Habonim catalog data only, for Extended-weald/Flanged/Tri-clamp end see Face To Face sizes page.

Std. port	Full port	Unit	Ball port	A	B	Standard design				6.0" bonnet				S	W	M	M DD	N	P	F		TxL	Weight kg/lb		Kv
						C	D	G	H	C	D	G	H										Std.	6.0"	Cv
DN65	DN50	mm	50.80	157.95	72.55	397.5	439.1	327.5	464	222.4	264	152.4	288.9	401	108	13.9	13.9	M20x2.5	13.15	(F07)	70	M8x8	12	10.6	205
2½"	2"	inch	2	6.22	2.86	15.65	17.29	12.89	18.27	8.76	10.39	6.00	11.37	15.79	4.25	0.55	0.55		0.52		2.76		26.46	23.37	240
DN80	DN65	mm	63.5	169.35	83.25	441.8	488.4	343.5	528	250.7	297.3	152.4	336.9	401	153	18.9	15.9	1"-14 UNS-2A	16.7	(F10)	102	M10x15	20	18.8	385
3"	2½"	inch	2.5	6.67	3.28	17.39	19.23	13.52	20.79	9.87	11.7	6.00	13.26	15.79	6.02	0.74	0.63		0.66		4.02		44.09	41.45	450
DN100	DN80	mm	82.6	213.6	108.8	457.6	504.2	343.5	544	266.5	313.1	152.4	352.9	610	191.5	18.9	15.9	1"-14 UNS-2A	16.7	(F10)	102	M10x15	30.5	29.3	615
4"	3"	inch	3.25	8.41	4.28	18.02	19.85	13.52	21.42	10.49	12.33	6.00	13.89	24.02	7.54	0.74	0.63		0.66		4.02		67.24	64.6	720
	DN100	mm	100	239	123	466.8	513.4	343.5	555	275.7	322.3	152.4	363.9	610	217	18.9	15.9	1"-14 UNS-2A	16.7	(F10)	102	M10x15	37.3	36.1	744
	4"	Inch	3.94	9.41	4.84	18.38	20.21	13.52	21.85	10.85	12.69	6.00	14.33	24.02	8.54	0.74	0.63		0.66		4.02		82.23	79.59	870
DN150		mm	111.1	346.1	146.1	542.4	611.9	385	665	309.8	379.3	152.4	432.4	916	266	28.45	23.75	1½"-12 UNS-1A	26.2	(F12)	125	M12x15	75	71	872
6"		inch	4.37	13.63	5.75	21.35	24.09	15.16	26.18	12.2	14.93	6.00	17.02	36.06	10.47	1.12	0.94		1.03		4.92		165.35	156.53	1020
	DN150	mm	150	322	180	564	633.5	385	686.6	331.4	400.9	152.4	545	916	328	28.45	23.75	1½"-12 UNS-1A	26.2	(F12)	125	M12x15	106	104	23.75
	6"	inch	5.91	12.68	7.09	22.20	24.94	15.16	27.03	13.05	15.78	6.00	17.87	36.06	12.91	1.12	0.94		1.03		4.92		233	229	0.94

Components & materials

Note: for C47

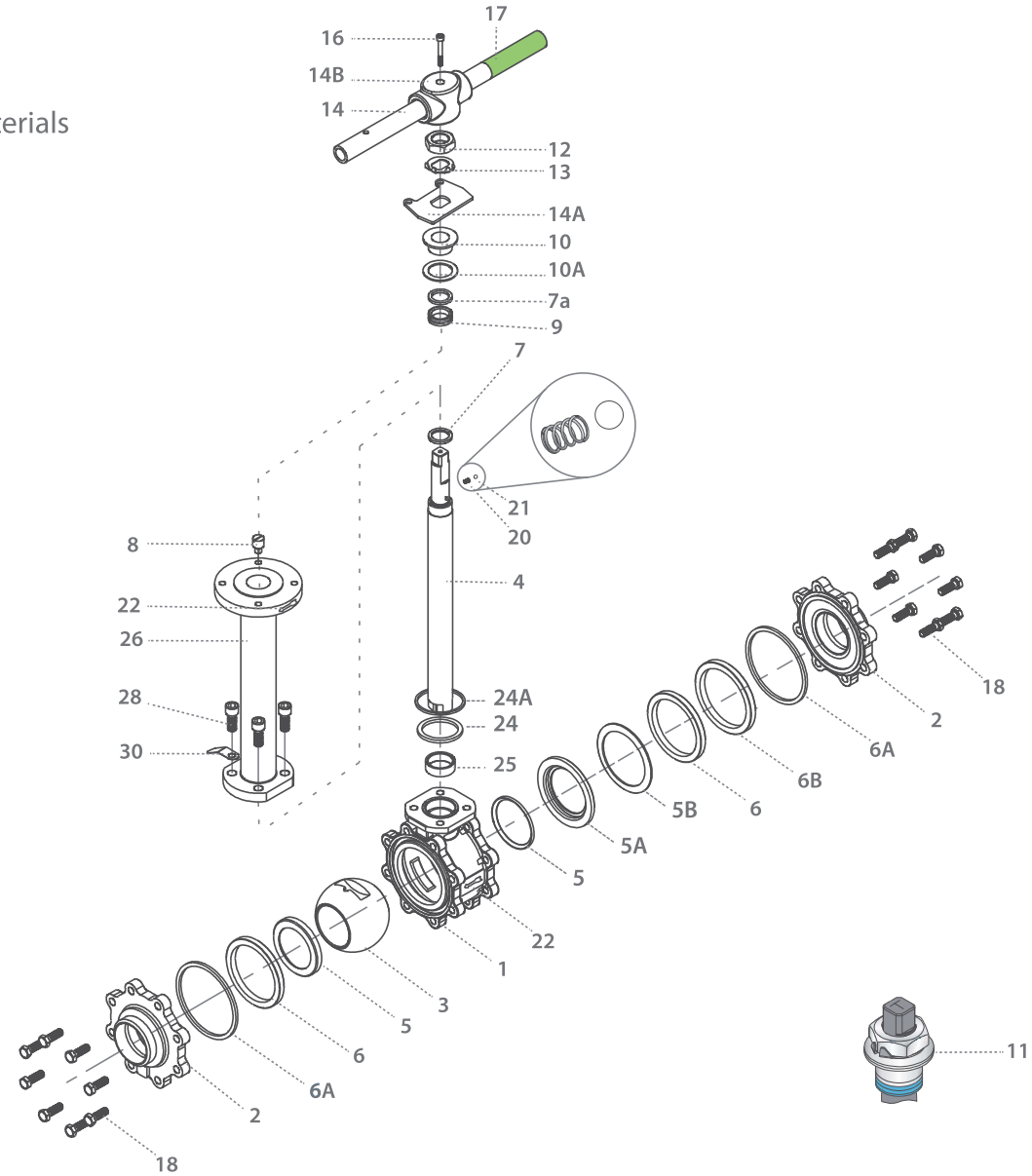

Item	Description	Material specifications	Qty.
1	Body	Acc. Ordering Code	1
2	End	Acc. Ordering Code	2
3	Ball	Acc. Ordering Code	1
4	Stem	Acc. Ordering Code	1
5*	Seat	Acc. Ordering Code	2
5A	Seat housing	S. Steel	1
5B	Upstream seat spring	Inconel 718	1
6*	Inner seal	TFM	2
6A*	Outer seal	Acc. Ordering Code	2
6B	Support ring	S. Steel	1
7*	Stem thrust seal	TFM, PCTFE	1
7a*	Anti-abrasion ring	TFM, PCTFE	1
8	Stop pin	S. Steel	1
9*	Stem seal	TFM, Graphite	1
10	Follower	S. Steel	1
10A	Slide bearing	S. Steel	1
11	Disc spring	S. Steel	2
12	Stem nut	S. Steel	1
13	Tab lock washer	S. Steel	1

Item	Description	Material specifications	Qty.
14	Handle	S. Steel	1
14A	Stop plate	S. Steel	1
14B	Wrench head	S. Steel	1
16	Wrench bolt	S. Steel	1
17	Sleeve	PVC	1
18	Body bolt	S. Steel	8
20	Anti-static spring	S. Steel	2
21	Anti-static plunger	S. Steel	2
22	Arrow flow	S. Steel	2
23	Tag (not shown)	S. Steel	1
24*	Bonnet inner seal	TFM	1
24A*	Bonnet outer seal	Acc. Ordering Code	1
25*	Stem bearing	PTFE	1
26	Bonnet	S. Steel	1
28	Bolt	S. Steel	4
30	Dog tag	S. Steel	1

* Repair kit components

C47 C47-BD

Face To Face Sizes

Valve Size	Unit	B		A-XBW		A-ETO	A-Flanged CLASS 150 FTF CLASS 300		A-Flanged CLASS 300 FTF CLASS 300		A-Flanged CLASS 600 FTF CLASS 600		A-Flanged DIN F1		A-TC
		Std. port	Full port	Std. port	Full port	Std. port	Std. port	Full port	Std. port	Full port	Std. port	Full port	Std. port	Full port	Full port
DN10	mm	20.6	20.6	140.6	143	108.6									
⅜"	inch	0.8	0.8	5.5	5.6	4.3									
DN15	mm	20.6	24.6	140.6	147	137	140	140	140	140	165	140*	130	130	88.8
½"	inch	0.8	1	5.5	5.8	5.4	5.5	5.5	5.5	5.5	6.5	5.5*	5.1	5.1	3.5
DN20	mm	24.6	31.7	147	168.7	147	152	152	152	152	152*	152*	150	150	101.6
¾"	inch	1	1.2	5.8	6.6	5.8	6	6	6	6	6*	6*	5.9	5.9	4
DN25	mm	31.7	41.3	168.7	179.3	164.1	165.1	165.1	165.1	165.1	216	165.1*	160	160	114.3
1"	inch	1.2	1.6	6.6	7.1	6.5	6.5	6.5	6.5	6.5	8.5	6.5*	6.3	6.3	4.5
DN32	mm	41.3	48.4	179.3	189.4	179.3	178.1	178.1	178.1	178.1	178.1*	178.1*	180	180	
1¼"	inch	1.6	1.9	7.1	7.5	7.1	7	7	7	7	7*	7*	7.1	7.1	
DN40	mm	48.4	56.3	189.4	200.3	184	190	190	190	190	241	190*	200	200	139.8
1½"	inch	1.9	2.2	7.5	7.9	7.2	7.5	7.5	7.5	7.5	9.5	7.5*	7.9	7.9	5.5
DN50	mm	56.3	72.6	200.3	232.6	193.5	216.1	216.1	216.1	216.1	292	216.1*	230	230	158.9
2"	inch	2.2	2.9	7.9	9.2	7.6	8.5	8.5	8.5	8.5	11.5	8.5*	9	9	6.3
DN65	mm	72.6	83.4	232.6	283.4	222.6	241	241	241	241	241*	330	290	290	213
2½"	inch	2.9	3.3	9.2	11.2	8.8	9.5	9.5	9.5	9.5	9.5*	13	11.4	11.4	8.4
DN80	mm	83.4	108.8	283.4	348.8	250.4	282	282	282	282	356	356	310	310	215.8
3"	inch	3.3	4.3	11.2	13.7	9.9	11.1	11.1	11.1	11.1	14	14	12.2	12.2	8.5
DN100	mm	108.8	123	348.8	390	348.8	305	305	305	305	432	432	350	350	245.4
4"	inch	4.3	4.8	13.7	15.4	13.7	12	12	12	12	17	17	13.78	13.78	9.7
DN150	mm	146.1	180	444.1	420	444.1	403.1	403.1	403.1	403.1	559	559	480	480	146.1
6"	inch	5.8	7.1	17.5	16.5	17.5	15.9	15.9	15.9	15.9	22	22	18.9	18.9	5.8

* Complay with class 300 FTF

XBW / ETO

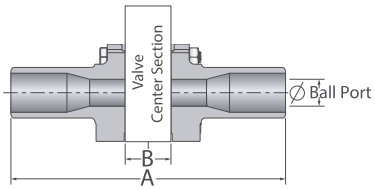

Flanged

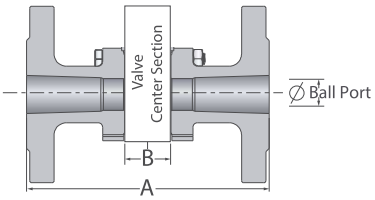

TC

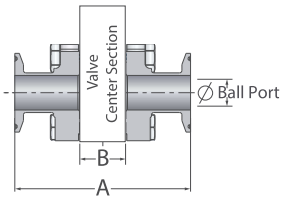

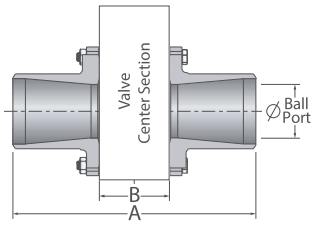

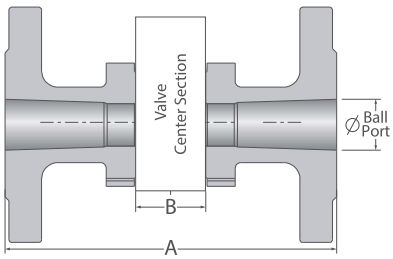

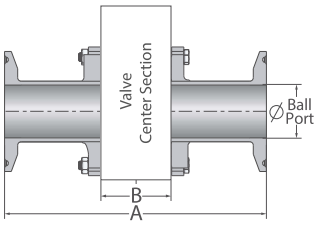

Cryogenic Floating Ball 3 Piece

Valve dimensions

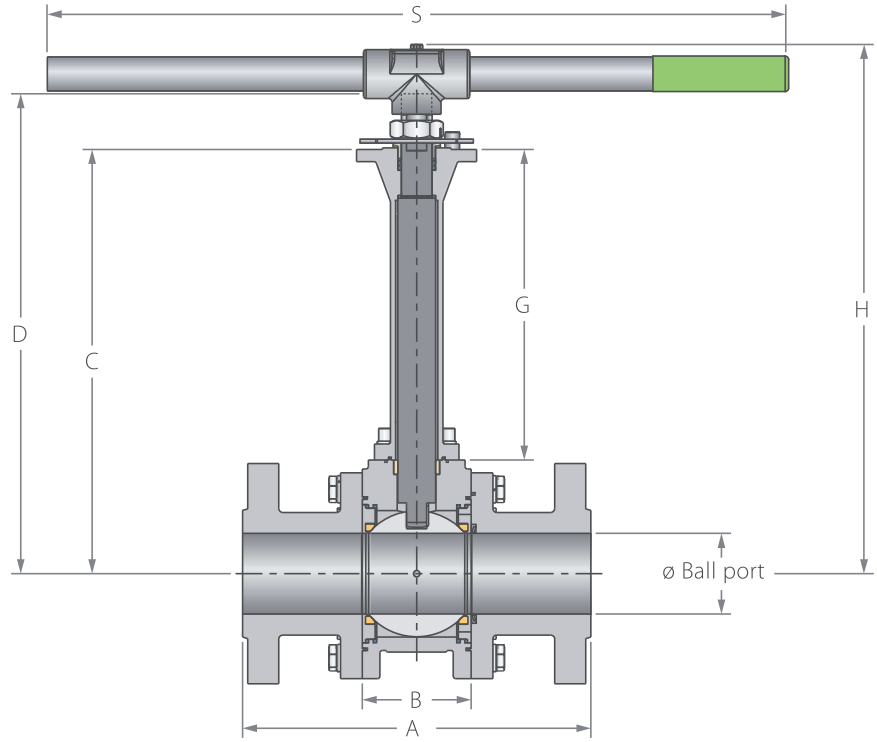

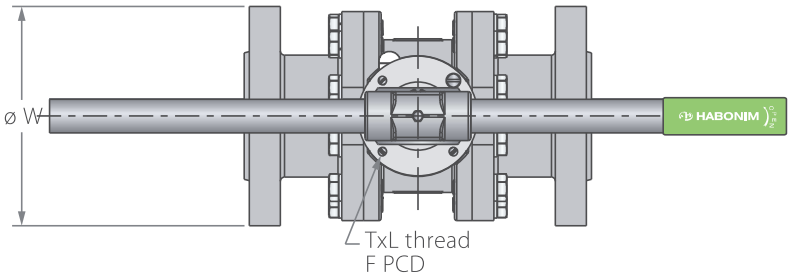

Preparation for actuation

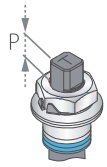

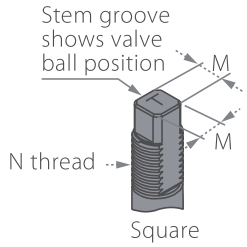

Full Port	Unit	Ball port	A		B	Standard design				6.0" bonnet				S	W	M	M DD	N	P	F		TxL	Weight Kg/lb (Welded)		Kv
			Welded	#600		C	D	G	H	C	D	G	H										Std.	6.0"	Cv
DN50	mm	51.05	200	292	75	432.5	479.1	345	431	239.9	286.5	152.4	238.4	401	165	18.9	15.9	1" - 14	16.7	(F10)	102	M10X15	25	22	421
2"	inch	2.01	7.87	11.5	2.95	17.03	18.86	13.58	16.97	9.44	11.28	6	9.39	15.79	6.5	0.74	0.63	UNS-2A	0.66		4.02		55	48	492
DN80	mm	80	356	356	110	511.5	580.6	385	632	278.9	348	152.4	399.4	916	210	28.45	23.75	1-½"	26.2	(F12)	125	M12X15	50	45	983
3"	inch	3.15	14.02	14.02	4.33	20.14	22.86	15.16	24.88	10.98	13.7	6	15.72	36.06	8.27	1.12	0.94	UNF-2A	1.03		4.92		110	99	1150
DN100	mm	100	400	432	135	527.3	596.4	385	646.5	294.7	363.8	152.4	413.9	916	275	28.45	23.75	1-½"	26.2	(F12)	125	M12X15	75	70	1807
4"	inch	3.94	15.75	17.01	5.31	20.76	23.48	15.16	25.45	11.6	14.32	6	16.3	36.06	10.83	1.12	0.94	UNF-2A	1.03		4.92		165	154	2114
DN150	mm	150	490	559	190	579	691.65	385	-	346.4	459.05	152.4	-	-	355	35.92	35.92	2"	40	(F14)	140	M16X20	155	140	4310
6"	inch	5.91	19.29	22.01	7.48	22.8	27.23	15.16	-	13.64	18.07	6	-	-	13.98	1.41	1.41	UN-2A	1.57		5.51		341	308	5043
DN200	mm	200	500	660	275	630	785	385	-	397.4	510.05	152.4	-	-	420	45.9	45.9	2-¾"	50	(F16)	165	M20X30	400	380	7970
8"	inch	7.87	19.69	25.98	10.83	24.8	30.9	15.16	-	15.65	20.08	6	-	-	16.54	1.81	1.81	UN-2A	1.97		6.5		880	836	9325

Cryogenic Floating Ball 3 Piece

Components & materials

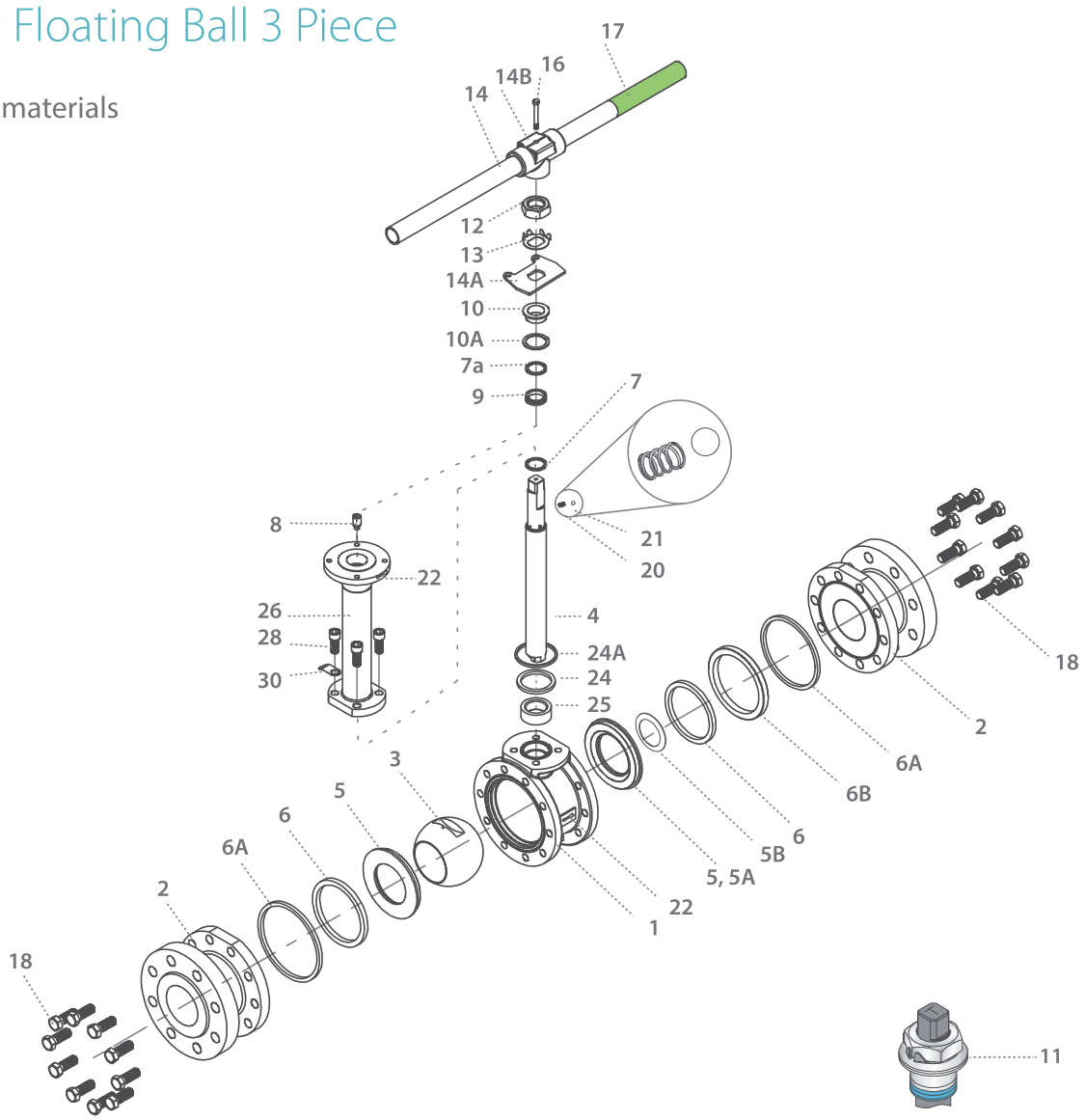

Item	Description	Material specifications	Qty.
1	Body	Acc. Ordering Code	1
2	End	Acc. Ordering Code	2
3	Ball	Acc. Ordering Code	1
4	Stem	Acc. Ordering Code	1
5*	Seat	Acc. Ordering Code	2
5A	Seat housing	S. Steel	2
5B	Upstream seat spring	Inconel 718	1
6*	Inner seal	TFM	2
6A*	Outer seal	Acc. Ordering Code	2
6B	Support ring	S. Steel	1
7*	Stem thrust seal	PCTFE	1
7a*	Anti-abrasion ring	PCTFE	1
8	Stop pin	S. Steel	1
9*	Stem seal	TFM	1
10	Follower	S. Steel	1
10A	Slide bearing	S. Steel	1
11	Disc spring	S. Steel	2
12	Stem nut	S. Steel	1

Item	Description	Material specifications	Qty.
13	Tab lock washer	S. Steel	1
14**	Handle	S. Steel	1
14A	Stop plate	S. Steel	1
14B	Wrench head	S. Steel	1
16	Wrench bolt	S. Steel	1
17	Sleeve	PVC	1
18	Body bolt	S. Steel	20-32
20	Anti-static spring	S. Steel	2
21	Anti-static plunger	S. Steel	2
22	Arrow flow	S. Steel	2
23	Tag (not shown)	S. Steel	1
24*	Bonnet inner seal	TFM	1
24A*	Bonnet outer seal	Acc. Ordering Code	1
25*	Stem bearing	PTFE	1
26	Bonnet	S. Steel	1
28	Bolt	S. Steel	4
30	Dog tag	S. Steel	1

* Repair kit components
** Gear operator should be used for size 6" DN150 and above (handle components are not included)

C47 C47-BD

Cryogenic Floating Ball 3 Piece; BD - Bidirectional - Ordering Code System

"Mandatory option" options are marked with green background | "Standard offer" options are marked with light green background

1	2	3	4	5	6	7	8	9	10	11	12	13	14	15	16	17	18	19	20	21	22	23	24	.	.	30
6	0			F	C	4	7	W	-	6	6	6	M	A	A	G	/	B	W			-				
Size		Features				Series		Design		Body material	Ends material	Ball material	Stem material	Seat material	Inner Seal	Outer Seal		End connection					Special features			

Size (1-2)		
Code	inch	mm
02	¼"	8
03	⅜"	10
05	½"	15
07	¾"	20
10	1"	25
12	1¼"	32
15	1½"	40
20	2"	50
25	2½"	65
30	3"	80
40	4"	100
60	6"	150

Features (3-6)	
F	Fire safe
C	Cryogenic design
B	Full port
N	Control service

Series (7-8)	
47	3 Piece Floating

Design (9)	
W	Total HermetiX Integrity package

Body material (11)	
6	CF8M
1	Bronze
7	Monel

End material (12)	
6	CF3M
1	Bronze
7	Monel

Ball material (13)	
6	S. Steel
1	Bronze
7	monel

Stem material (14)	
M	High Strength S. Steel
6	S. Steel
Z	Inconel

Seat material (15)	
A	TFM
C	PCTFE
P	CF PTFE

Inner Seal Material (16)	
A	TFM
G	Expanded graphite

Outer Seal Material (17)	
G	Expanded graphite
A	TFM

End connections (19-22)	
Welded	
BW10	Buttweld schd. 10
BW	Buttweld schd. 40
XBW10	Extended buttweld schd. 10
XBW	Extended buttweld schd. 40
BW5	Buttweld schd. 5
BW80	Buttweld schd. 80
BWO *	Buttweld tube OD
BWD	Buttweld DIN 11860
BWI	buttweld ISO
SW	Socket weld
SWO *	Socket weld tube OD
XBW80	Extended Buttweal 80
XSW	Extended socket weld
ETO *	Extended tube OD
ETI	Extended buttweld ISO
ETD	Extended buttweld DIN

* Std. port only

Threaded	
NPT	ASME B1.20.1 - National Pipe Taper thread
MNPT	Male NPT
BSPT	EN 10226 - Pipe Taper thread
MBSPT	Male BSPT
BSPP	ISO228-1, DIN3852 - Pipe parallel thread
DIN3852	DIN3852 - Pipe Parallel thread
AS5202	SAE internal straight thread
Flanged	
150	ASME B16.5 #150 RF
300	ASME B16.5 #300 RF
600	ASME B16.5 #600 RF
900	ASME B16.5 #900 RF
PN16	EN1092 PN16 RF
PN40	EN1092 PN40 RF
PN63	EN1092 PN63 RF
PN100	EN1092 PN100 RF
PN160	EN1092 PN160 RF
Clamp	
GR	Grayloc© compatible hub (Grayloc© is a registered trademark of Grayloc Products, L.L.C.)
TC *	Tri-Clamp
LL *	Compression fitting (Imperial) - No nuts & Ferrules
LM *	Compression fitting (metric) - No nuts & Ferrules
LL-NF *	Compression fitting (Imperial) - with nuts & Ferrules
LM-NF *	Compression fitting (metric) - with nuts & Ferrules

* Std. port only

Special Features (24-30)	
SPR	Spring loaded seat, valve 2½" Full port and up
SPR	Spring loaded seat, up to 2½" std. port
6.0	Short bonnet
BD	Bi-Directional Design
RJT	Ring Type Joint
B	Body made from rolled bar
EP	Electropolished
Vxx	V port, xx=angle
G...	Internal surface finish (G24, G32)
VBxx	Characterized control ball, xx=angle
FF	Flat face

Cryogenic Floating Ball 3 Piece - Ordering Code System

"Mandatory option" options are marked with green background | "Standard offer" options are marked with light green background

1	2	3	4	5	6	7	8	9	10	11	12	13	14	15	16	17	18	19	20	21	22	23	24	.	.	30
6	0		F	C		2	6		-	6	6	6	M	F	A	G	/	B	W			-				
Size		Features				Series		Design		Body material	Ends material	Ball material	Stem material	Seat material	Inner Seal	Outer Seal		End connection					Special features			

Size (1-2)		
Code	inch	mm
20	2"	50
30	3"	80
40	4"	100
60	6"	150
80	8"	200

Features (3-6)	
F	Fire safe
C	Cryogenic design
N	Control

Series (7-8)	
26	3 Piece Floating

Body material (11)	
6	S. Steel
1	Bronze

End material (12)	
6	S. Steel
1	Bronze

Ball material (13)	
6	S. Steel 316L

Stem material (14)	
M	High Strength S. Steel
Z	Inconel

Seat material (15)	
F	Hybrid Seat (info in special features)

Inner Seal Material (16)	
A	TFM
G	Expanded graphite

Outer Seal Material (17)	
G	Expanded graphite
A	TFM

End connections (19-22)	
Welded	
BW *	Buttweld schd. 40
BW10	Buttweld schd. 10
BW80	Buttweld schd. 80
SW	Socket weld
XBW10	Extended buttweld schd. 10
XBW	Extended buttweld schd. 40
XSW	Extended socket weld

* Up to 4" only

Flanged	
150	ASME B16.5 #150 RF
300	ASME B16.5 #300 RF
600	ASME B16.5 #600 RF
PN16	EN1092 PN16 RF
PN40	EN1092 PN40 RF
PN63	EN1092 PN63 RF
PN100	EN1092 PN100 RF
Flanged RTJ	
600RTJ	ASME B16.5 #600 RTJ
Clamp	
GR	Grayloc© compatible hub (Grayloc© is a registered trademark of Grayloc Products, L.L.C.)

Special Features (24-30)	
6.0	Short bonnet
Vxx	V port
VBxx	Characterized control ball

Hybrid Seats (24-27)

Insert material		Upstream/ Downstream		Insert Shape		Seal Type	
A	TFM	0	Hybrid seats on upstream and downstream, spring loaded	0	Scraper	5	Seal 1: TFM; Seal 2: Expanded graphite
P	CF PTFE					6	Seal 1: TFM
C	PCTFE						

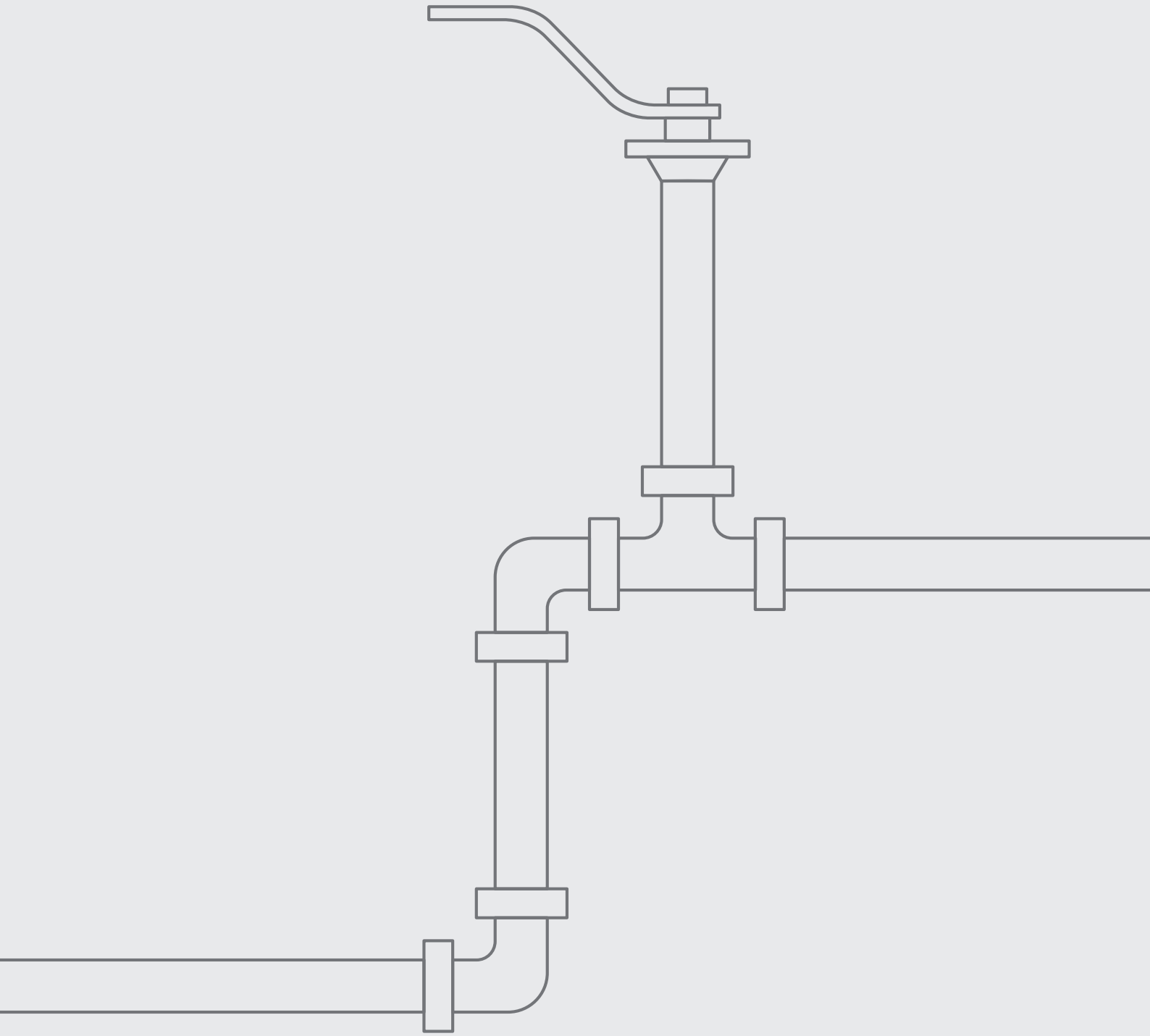

FLOATING BALL

HIGH PRESSURE 3 PIECE

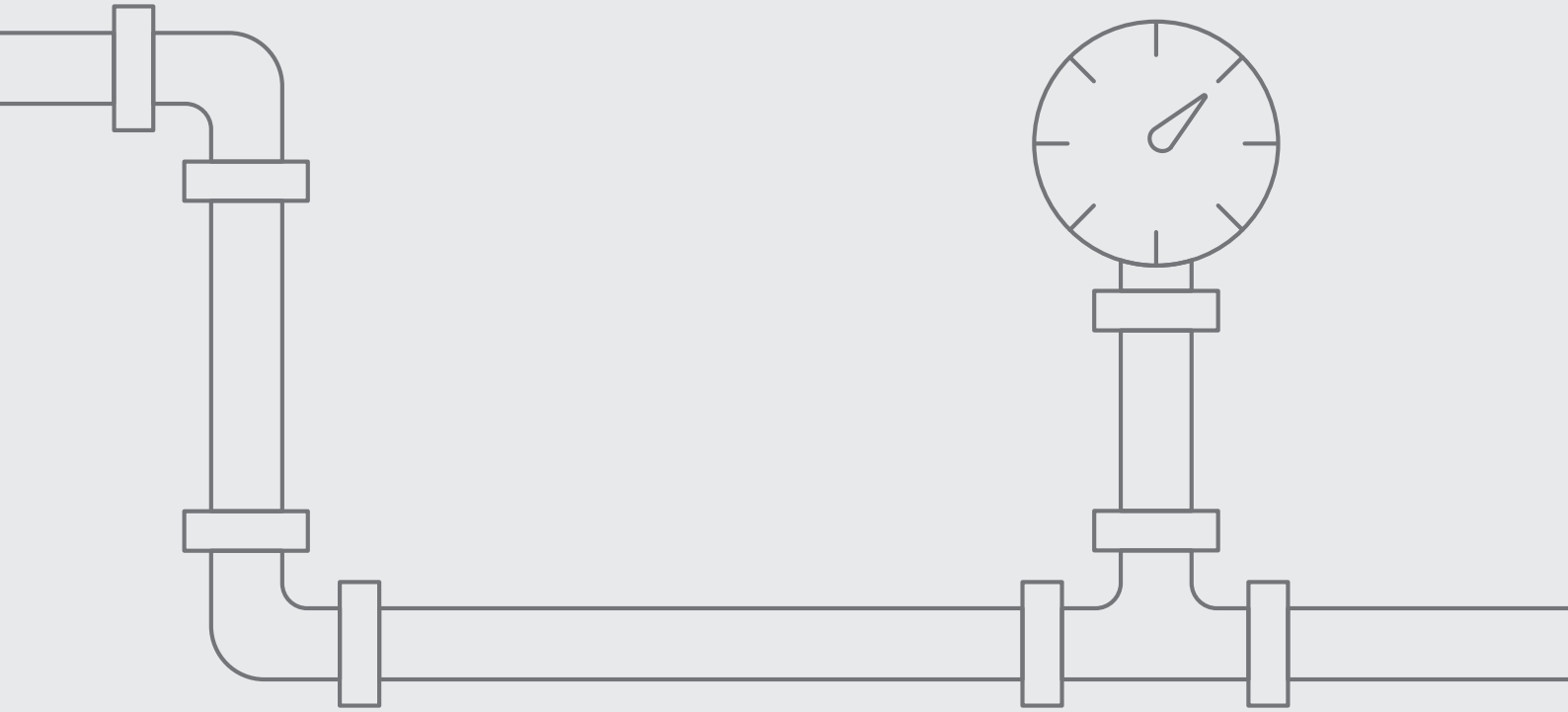

Cryogenic High Pressure Floating Ball 3 Piece

Valve dimensions

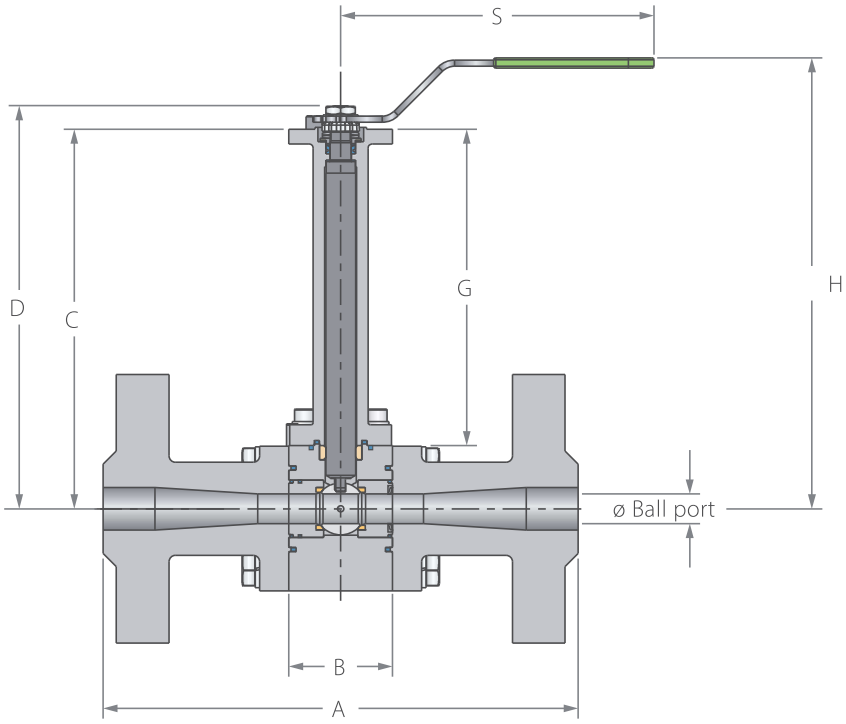

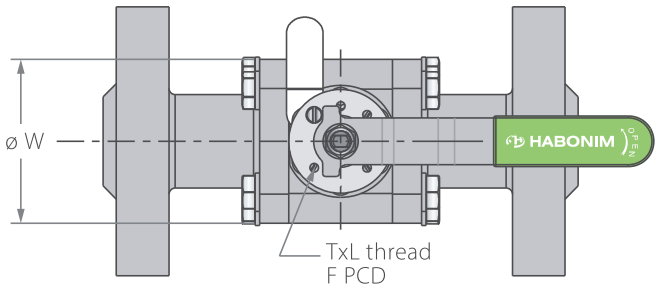

Preparation for actuation

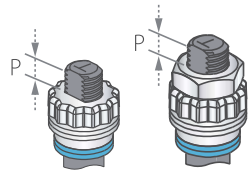

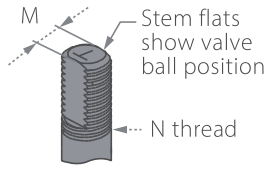

Std. port	Full port	Unit	Ball port	A				B	Standard design				6.0" bonnet				S	W	M	N	P	F		TxL	Kv	Weight
				Welded	Threaded	#1500	#2500		C	D	G	H	C	D	G	H									Cv	kg/lb
DN15	DN8, DN10	mm	11.15	173.6	107.2	216	264	50	333	341.9	304	380.6	181.4	190.3	152.4	229	150	78	5.50	⅜"	7.2	F03	36	M5X8	6.9	3.9
½"	¼", ⅜"	inch	0.44	6.83	4.22	8.50	10.39	1.97	13.11	13.46	11.97	14.98	7.14	7.49	6	9.02	5.91	3.07	0.22	UNF	0.28		1.42		8	8.6
DN20	DN15	mm	13	188.6	120	229	273	60	338.1	355.6	304	386.6	186.5	204	152.4	235	187	98	7.5	7/16"	7.2	F04	42	M5X7	10	6.8
¾"	½"	inch	0.51	7.43	4.72	9.02	10.75	2.36	13.31	14	11.97	15.22	7.34	8.03	6	9.25	7.36	3.86	0.3	UNF	0.28		1.65		12	15
DN25	DN20	mm	20.65	208.6	144.2	254	308	68	347.75	377.25	304	401.6	196.15	225.65	152.4	250	237	114	8.65	9/16"	7.2	F05	50	M6X8	28	10.6
1"	¾"	inch	0.81	8.21	5.68	10	12.13	2.68	13.69	14.85	11.97	15.81	7.72	8.88	6	9.84	9.33	4.49	0.34	UNF	0.28		1.97		32	23.3
DN32	DN25	mm	25.5	211.6	152	279	349	68	355.5	385	304	410	203.9	233.4	152.4	258.4	237	124	8.65	9/16"	8	F05	50	M6X8	49	12.5
1¼"	1"	inch	1	8.33	5.98	10.98	13.74	2.68	14	15.16	11.97	16.14	8.03	9.19	6	10.17	9.33	4.88	0.34	UNF	0.31		1.97			27.5

Cryogenic High Pressure Floating Ball 3 Piece

Components & materials

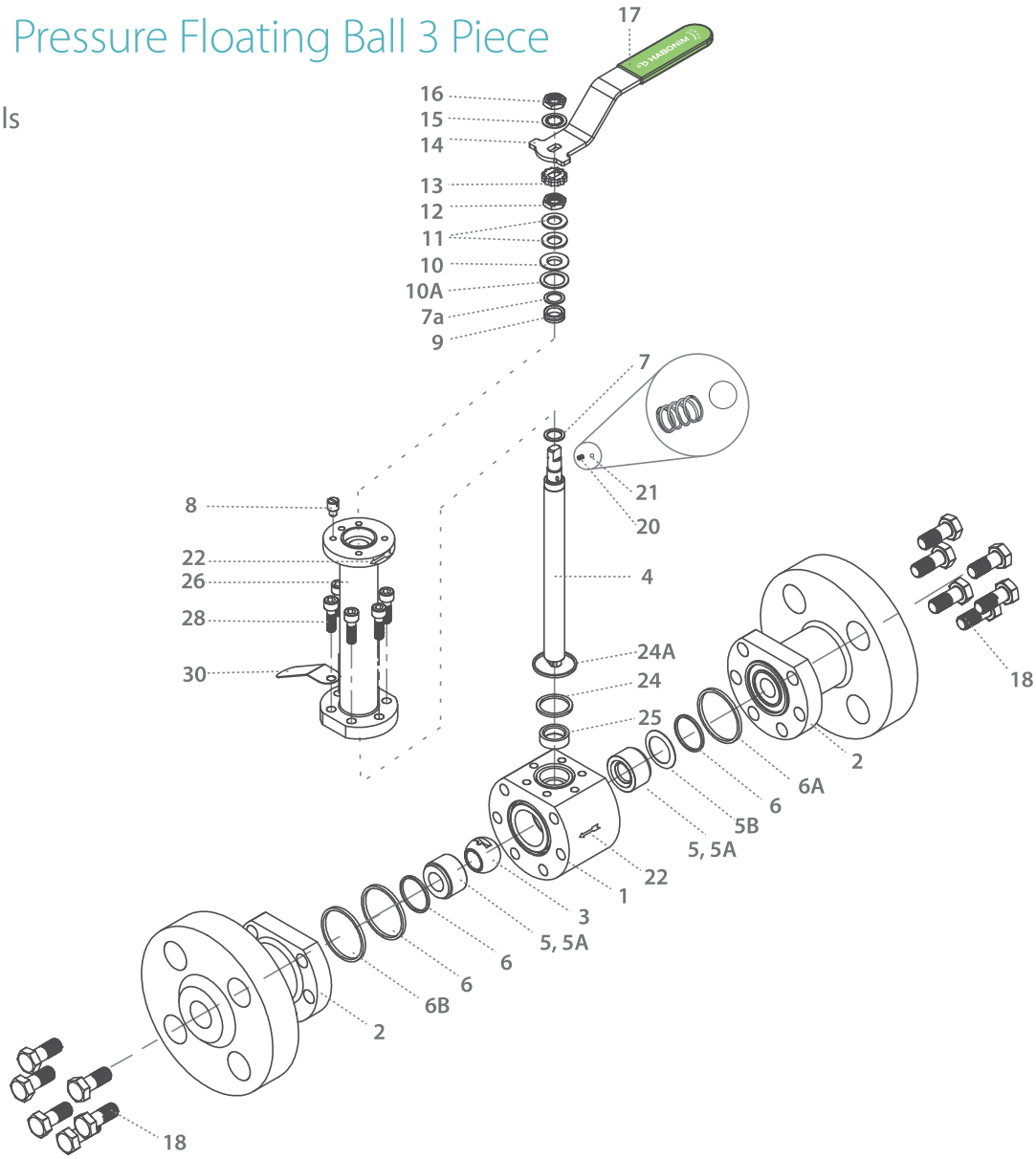

Item	Description	Material specifications	Qty.
1	Body	Acc. Ordering Code	1
2	End	Acc. Ordering Code	2
3	Ball	Acc. Ordering Code	1
4	Stem	Acc. Ordering Code	1
5*	Seat	Acc. Ordering Code	2
5A*	Seat housing	S. Steel	2
5B	Upstream seat spring	Inconel 718	1
6*	Inner seal	TFM	2
6A*	Outer seal	Acc. Ordering Code	2
6B*	Graphite string	Graphite	1
7*	Stem thrust seal	PCTFE	1
7a*	Anti-abrasion ring	PCTFE	1
8	Stop pin	S. Steel	1
9*	Stem seal	TFM	1
10	Follower	S. Steel	1
10A	Slide bearing	S. Steel	1
11	Disc spring	S. Steel	2
12	Stem nut	S. Steel	2

Item	Description	Material specifications	Qty.
13	Locking clip	S. Steel	1
14	Handle	S. Steel	1
15	Serrated washer	S. Steel	1
16	Handle nut	S. Steel	1
17	Sleeve	PVC	1
18	Body bolt	S. Steel	8-16
20	Anti-static spring	S. Steel	2
21	Anti-static plunger	S. Steel	2
22	Arrow flow	S. Steel	2
23	Tag (not shown)	S. Steel	1
24*	Bonnet inner seal	TFM	1
24A*	Bonnet outer seal	Acc. Ordering Code	1
25*	Stem bearing	PTFE	1
26	Bonnet	S. Steel	1
28	Bolt	S. Steel	4-6
30	Dog tag	S. Steel	1

* Repair kit components

Cryogenic High Pressure Floating Ball 3 Piece

Valve dimensions

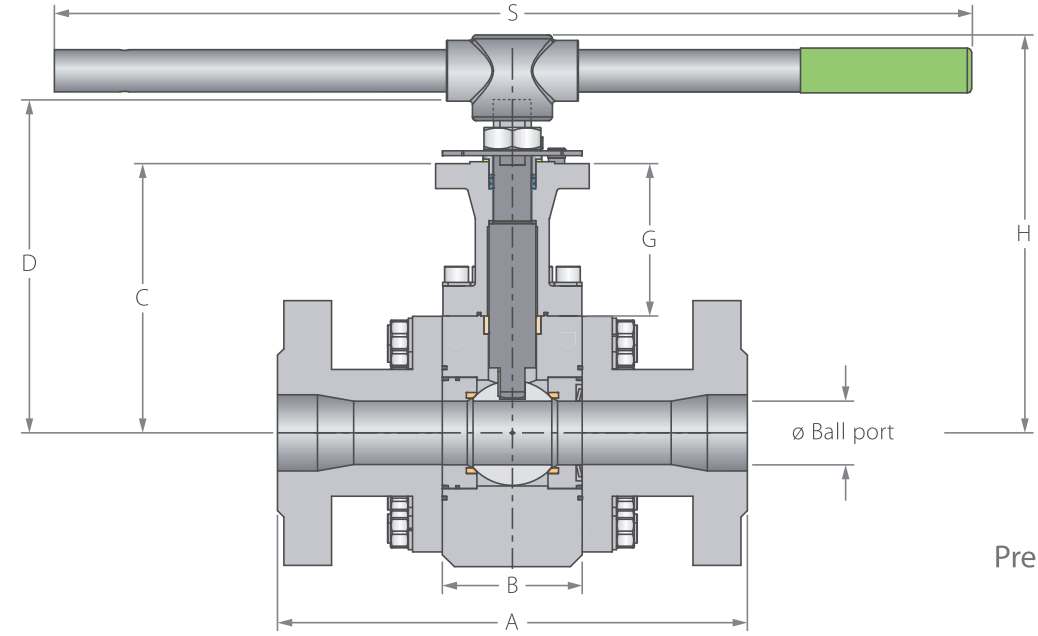

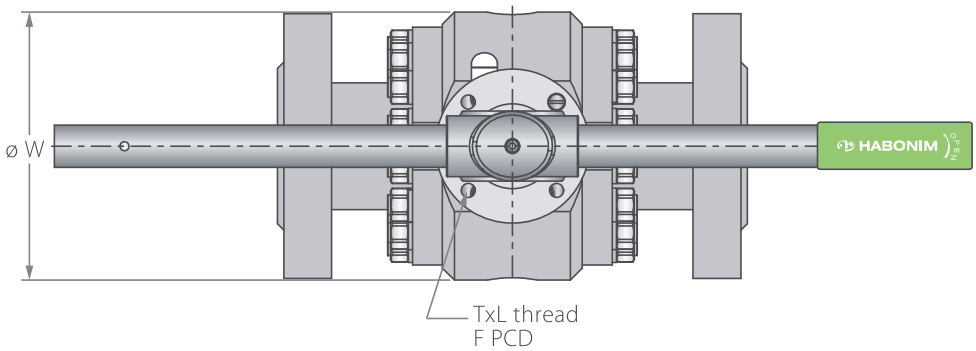

Preparation for actuation

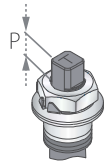

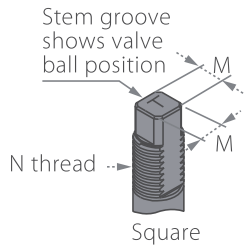

Std. port	Full port	Unit	Ball port	A Welded	A Threaded	A #1500	A #2500	B	Standard design C	Standard design D	Standard design G	Standard design H	6.0" bonnet C	6.0" bonnet D	6.0" bonnet G	6.0" bonnet H	S	W	M	M DD	N	P	F		TxL	Kv Cv	Weight kg/lb
DN40	DN32	mm	31.8	262	179	305	384	95	357	398.6	304	425	205.4	247	152.4	273.4	400	140	13.9	13.9	M20X2.5	8	(F07)	70	M8X7	69	21
1½"	1¼"	inch	1.25	10.31	7.05	12.01	15.12	3.74	14.06	15.69	11.97	16.73	8.09	9.72	6	10.76	15.75	5.51	0.55	0.55		0.31		2.76		80	46.2
DN50	DN40	mm	38.15	255.8	195	368	451	95	376.5	418.1	304	443.75	224.9	266.5	152.4	292.15	400	172	13.9	13.9	M20X2.5	15.75	(F07)	70	M8X10	102	30.8
2"	1½"	inch	1.5	10.07	7.68	14.49	17.76	3.74	14.82	16.46	11.97	17.47	8.85	10.49	6	11.5	15.75	6.77	0.55	0.55		0.62		2.76		118	67.8
DN65	DN50	mm	51	313	225	419	508	105	392.4	438.9	304.8	479.4	240	286.5	152.4	327	610	199	18.9	15.9	1"-14 UNS-2A	16.7	(F10)	102	M10X15	208	43
2½"	2"	inch	2.01	12.32	8.86	16.5	20	4.13	15.45	17.28	12	18.87	9.45	11.28	6	12.87	24.02	7.83	0.74	0.63		0.66		4.02		241	94.6
DN80	DN65	mm	63.75	343.2	-	470	578	140	421	490.1	304	-	269.4	338.5	152.4	-	-	268	28.45	23.75	1-½" UNF-2A	26.2	(F12)	125	M16X25	300	94.7
3"	2½"	inch	2.51	13.51	-	18.5	22.76	5.51	16.57	19.3	11.97	-	10.61	13.33	6	-	-	10.55	1.12	0.94		1.03		4.92		348	208.4
DN100	DN80	mm	82.8	419.2	-	546	673	140	438	550.65	304	-	286.4	399.05	152.4	-	-	298	28.45	23.75	1-½" UNF-2A	26.2	(F12)	125	M16X25	615	122.5
4"	3"	inch	3.26	16.5	-	21.5	26.5	5.51	17.24	21.68	11.97	-	11.28	15.71	6	-	-	11.73	1.12	0.94		1.03		4.92		713	269.5
DN150	DN100	mm	100	510	-	705	914	175	451	563.65	304	-	299.4	412.05	152.4	-	-	339	35.9	35.9	2" UNF-2A	40	(F16)	165	M20X25	872	266
6"	4"	inch	3.94	20.08	-	27.76	35.98	6.89	17.76	22.19	11.97	-	11.79	16.22	6	-	-	13.35	1.41	1.41		1.57		6.5		1012	585
DN200	DN150	mm	144.4	680	-	832	1022	210	496	637	304	-	344.4	485.4	152.4	-	-	423	45.9	45.9	2-¾" UN-2A	40	(F16)	165	M20X25	1552	509
8"	6"	inch	5.69	26.77	-	32.76	40.24	8.27	19.53	25.08	11.97	-	13.56	19.11	6	-	-	16.65	1.81	1.81		1.57		6.5		1800	1120

Components & materials

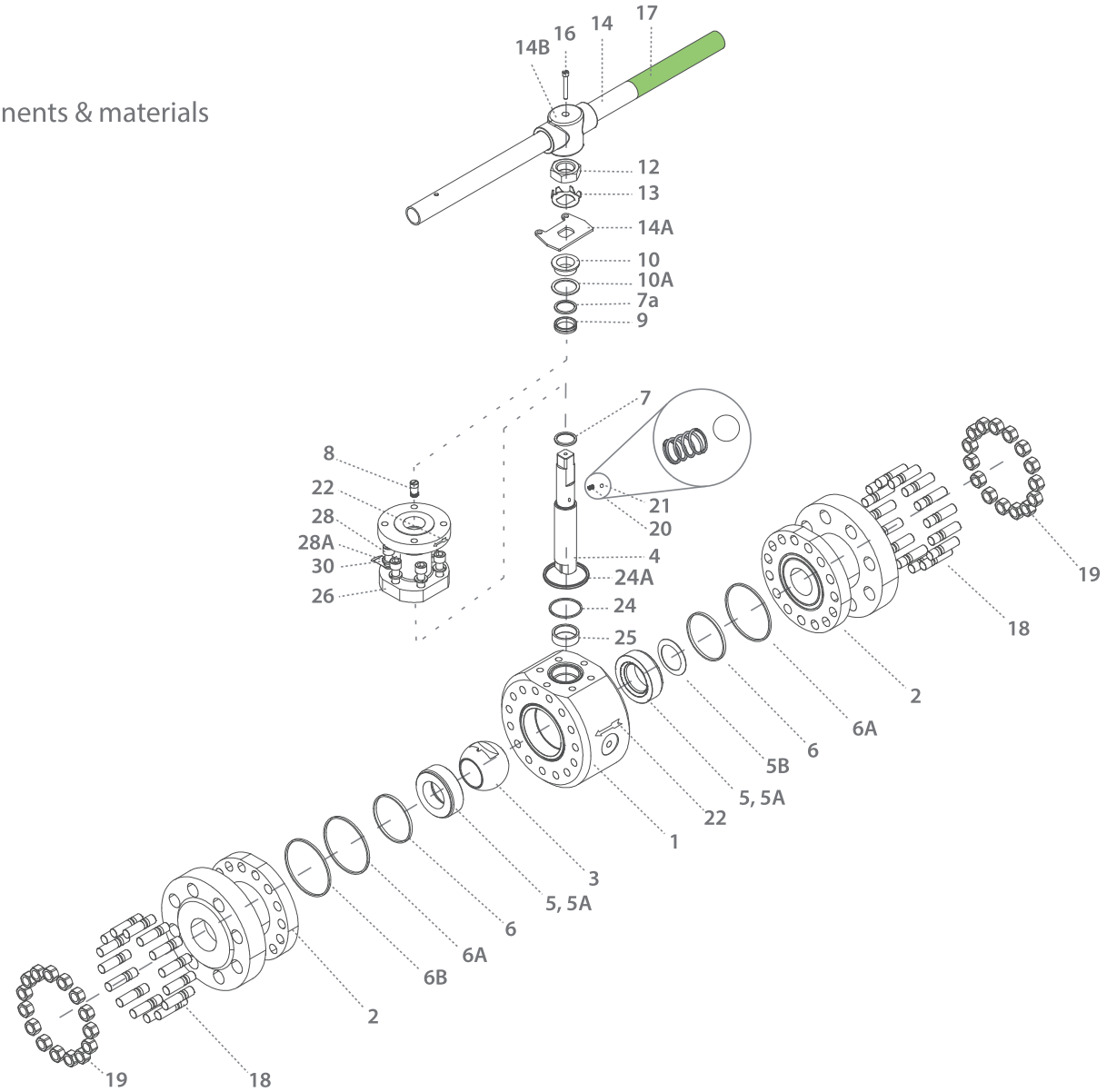

Item	Description	Material specifications	Qty.
1	Body	Acc. Ordering Code	1
2	End	Acc. Ordering Code	2
3	Ball	Acc. Ordering Code	1
4	Stem	Acc. Ordering Code	1
5*	Seat	Acc. Ordering Code	2
5A*	Seat housing	S. Steel	2
5B(1)	Upstream seat spring	Inconel 718	1
6*	Inner seal	Graphite, TFM	2
6A*	Outer seal	Acc. Ordering Code	2
6B*	Graphite string	Graphite	1
7*	Stem thrust seal	PCTFE	1
7a*	Anti-abrasion ring	PCTFE	1
8	Stop pin	S. Steel	1
9*	Stem seal	TFM	1
10	Follower	S. Steel	1
10A	Slide bearing	S. Steel	1
11	Disc spring	S. Steel	2
12	Stem nut	S. Steel	1
13	Tab lock washer	S. Steel	1
14**	Handle	S. Steel	1

Item	Description	Material specifications	Qty.
14A	Stop plate	S. Steel	1
14B	Wrench head	S. Steel	1
16	Wrench bolt	S. Steel	1
17	Sleeve	PVC	1
18	Body bolt	S. Steel	8-16
18A	Spring washer	S. Steel	8-16
19	Body bolt	S. Steel	8-16
20	Anti-static spring	S. Steel	2
21	Anti-static plunger	S. Steel	2
22	Arrow flow	S. Steel	2
23	Tag (not shown)	S. Steel	1
24*	Bonnet inner seal	Graphite, TFM	1
24A*	Bonnet outer seal	Acc. Ordering Code	1
25*	Stem bearing	PTFE	1
26	Bonnet	S. Steel	1
28	Bolt	S. Steel	6-8
30	Dog tag	S. Steel	1

* Repair kit components

** Gear operator should be used for size 3" DN80 (handle components are not included)

Cryogenic High Pressure Floating Ball 3 Piece - Ordering Code System

"Mandatory option" options are marked with green background | "Standard offer" options are marked with light green background

1	2	3	4	5	6	7	8	9	10	11	12	13	14	15	16	17	18	19	20	21	22	23	24	.	.	30
6	0			F	C	2	8	W	-	6	6	M	M	F	A	G	/	B	W			-				
Size		Features				Series		Design		Body/End material		Ball/End material		Seat material	Inner Seal	Outer Seal		End connection					Special features			

Size (1-2)		
Code	inch	mm
02	¼"	8
03	⅜"	10
05	½"	15
07	¾"	20
10	1"	25
12	1¼"	32
15	1½"	40
20	2"	50
25	2½"	65
30	3"	80
40	4"	100
60	6"	150
80	8"	200

Features (3-6)	
F	Fire safe
C	Cryogenic
B	Full port
N	Control

Series (7-8)	
28	HP Float 3 piece.

Design (9)	
W	Total HermetiX Integrity package

Body material (11)	
6	S. Steel 316/316L

End material (12)	
6	S. Steel 316/316L

Ball material (13)	
M	High Strength S. Steel

Stem material (14)	
M	High Strength S. Steel

Seat material (15)	
F	Hybrid Seat (info in special features)

Inner Seal Material (16)	
A	TFM
G	Expanded graphite

Outer Seal Material (17)	
G	Expanded graphite
A	TFM

End connections (19-22)	
Welded	
XBW80	Extended buttweld schd. 80
XBW160*	Extended buttweld schd. 160
XBW	Extended buttweld schd. 40
XXS	Extended buttweld schd. XXS
XSW	Extended socket weld

* Std. port only

Threaded	
NPT	ASME B1.20.1 - National Pipe Taper thread
BSPT	EN 10226-2 - British Standard Pipe Taper thread
BSPP	ISO228-1, DIN3852 - Pipe parallel thread
DIN3852	DIN3852 EN 10226-1 - Pipe parallel thread
AS5202	SAE internal straight thread
Flanged	
600	ASME B16.5 #600 RF
900	ASME B16.5 #900 RF
1500	ASME B16.5 #1500 RF
2500	ASME B16.5 #2500 RF
PN100	EN1092 PN100 RF
PN160	EN1092 PN160 RF
PN250	EN 1092-1 PN250 RF
PN400	EN 1092-1 PN400 RF
Flanged RTJ	
600RTJ	ASME B16.5 #600 RTJ
900RTJ	ASME B16.5 #900 RTJ
1500RTJ	ASME B16.5 #1500 RTJ
2500RTJ	ASME B16.5 #2500 RTJ
Clamp	
GR	Grayloc© compatible hub (Grayloc© is a registered trademark of Grayloc Products, L.L.C.)

Hybrid Seats (24-27)							
24		25		26		27	
Insert material		"Upstream/ Downstream"		Insert Shape		Seal Type	
C	PCTFE	0	Hybrid seats on upstream and downstream, spring loaded	0	Scraper	5	Seal 1: TFM; Seal 2: Expanded graphite
						6	Seal 1: TFM

Special Features (24-30)	
Vxx	V port
VBxx	Characterized control ball
6.0	Short bonnet

DC47 C61 C62

Cryogenic Valves

FLOATING BALL

DIVERTER MULTIPORT

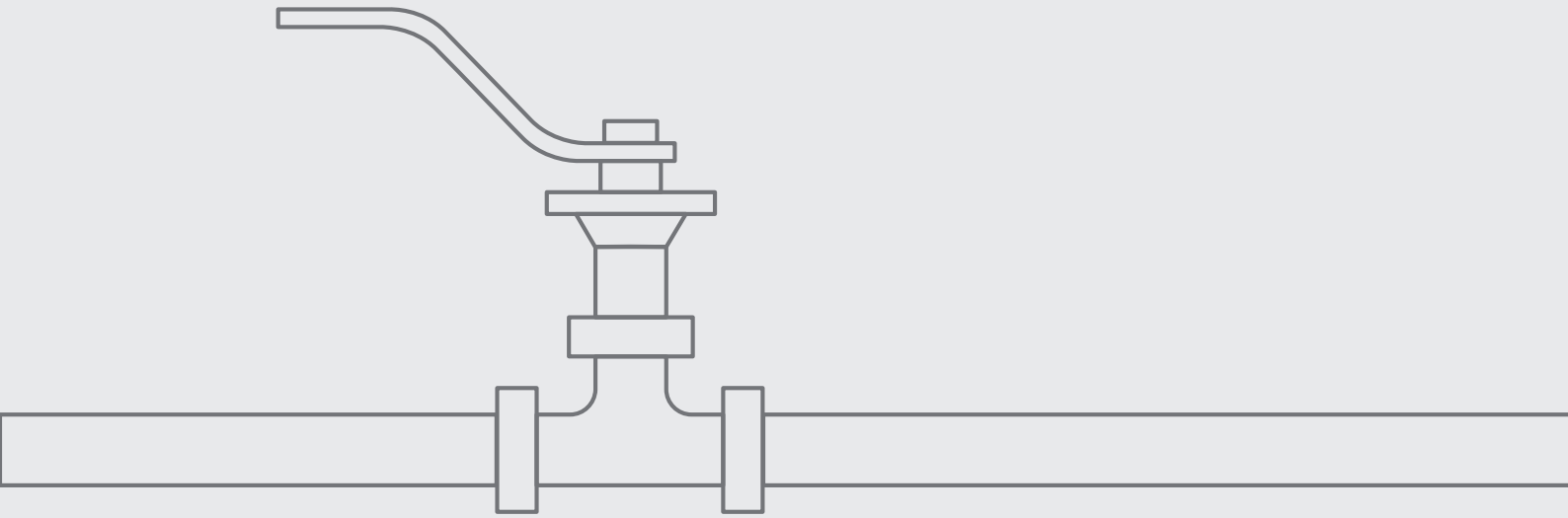

DC47 ½"-2" | DN15-DN50 | CLASS 600

Cryogenic Diverter Bottom Entry Floating Ball

Valve dimensions

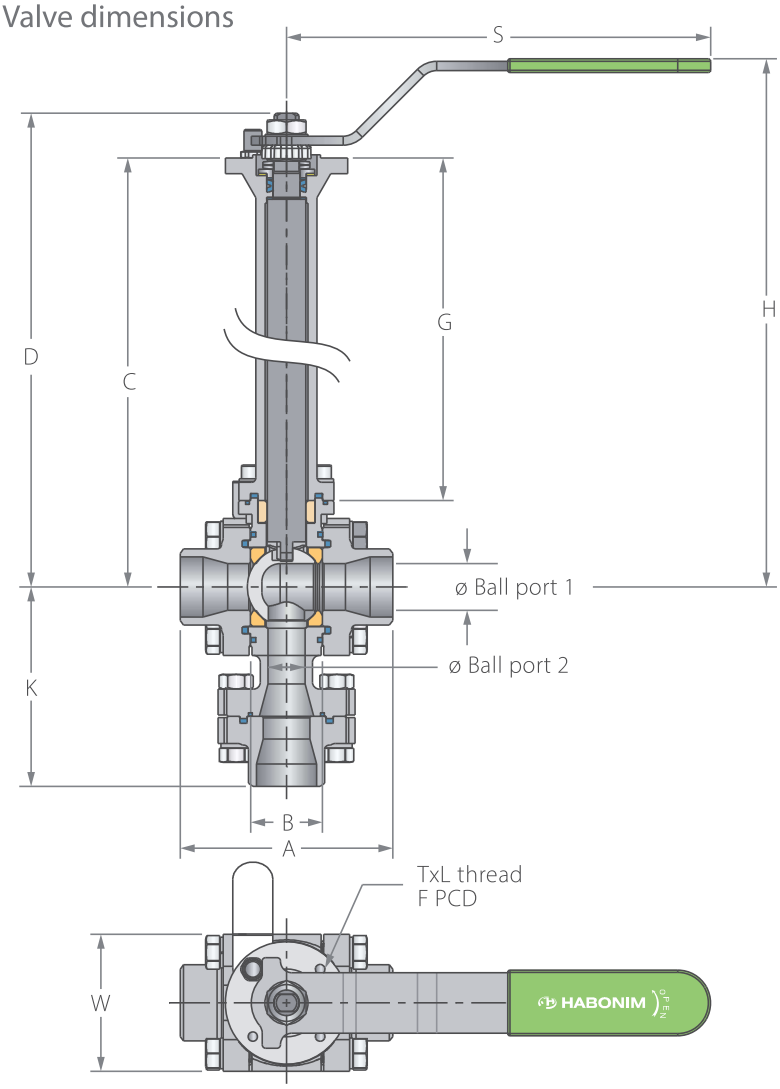

Preparation for actuation

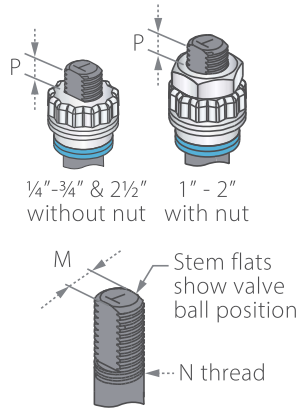

Std. port	Full Port	Unit	Ball port1	Ball port2	A	B	Standard design				6.0" bonnet				K	S	W	M	N	P	F		TxL	Weight kg/lb	
							C	D	G	H	C	D	G	H										Std.	6.0 Bonnet
DN15	DN10	mm	10.5	9.5	65.8	20.6	333	341.9	304	367.3	181.4	190.3	152.4	215.7	88.2	150	45.8	5.5	⅜" UNF	7.2	(F03)	36	M5X7	1.79	1.47
½"	⅜"	inch	0.41	0.37	2.59	0.81	13.11	13.46	11.97	14.46	7.14	7.49	6	8.49	3.47	5.91	1.8	0.22		0.28		1.42		3.93	3.23
DN20	DN15	mm	14.3	11.9	70.55	24.55	335.4	344.3	304	369.6	183.8	192.7	152.4	218	93.7	150	52.1	5.5	⅜" UNF	7.2	(F03)	36	M5X7	1.52	1.20
¾"	½"	inch	0.56	0.47	2.78	0.97	13.2	13.56	11.97	14.55	7.24	7.59	6	8.58	3.69	5.91	2.05	0.22		0.28		1.42		3.35	2.64
DN25	DN20	mm	20.65	15.9	93.75	31.75	342.15	359.65	304	387	190.55	208.05	152.4	235.4	119	187	60.45	7.54	7/16" UNF	7.2	(F04)	42	M5X7	3.19	2.84
1"	¾"	inch	0.81	0.63	3.69	1.25	13.47	14.16	11.97	15.24	7.5	8.19	6	9.27	4.69	7.32	2.38	0.3		0.28		1.65		7.02	6.25
DN32	DN25	mm	25.4	20.5	108	41.25	346.65	364.15	304	388	195.05	212.55	152.4	236.4	130.15	187	68.8	7.54	7/16" UNF	7.2	(F04)	42	M5X7	4.21	3.75
1¼"	1"	inch	1	0.81	4.25	1.62	13.65	14.34	11.97	15.28	7.68	8.37	6	9.31	5.12	7.36	2.71	0.3		0.28		1.65		9.25	8.24
DN40	DN32	mm	26.6	31.8	115.35	48.35	347.55	377.05	304	404	195.95	225.45	152.4	252.4	139	237	79.15	8.71	9/16" UNF	8	(F05)	50	M6X8	5.22	4.65
1½"	1¼"	inch	1.05	1.25	4.54	1.90	13.68	14.84	11.97	15.91	7.71	8.88	6	9.94	5.47	9.29	3.12	0.34		0.31		1.97		11.51	10.25
DN50	DN40	mm	38.15	35	127.9	56.3	352.25	381.75	304	409	200.65	230.15	152.4	257.4	149.45	237	90.7	8.71	9/16" UNF	8.5	(F05)	50	M6X8	6.68	6.11
2"	1½"	inch	1.50	1.38	5.04	2.22	13.87	15.03	11.97	16.1	7.90	9.06	6	10.13	5.88	9.29	3.57	0.34		0.33		1.97		14.72	13.47

Cryogenic Diverter Bottom Entry Floating Ball

Components & materials

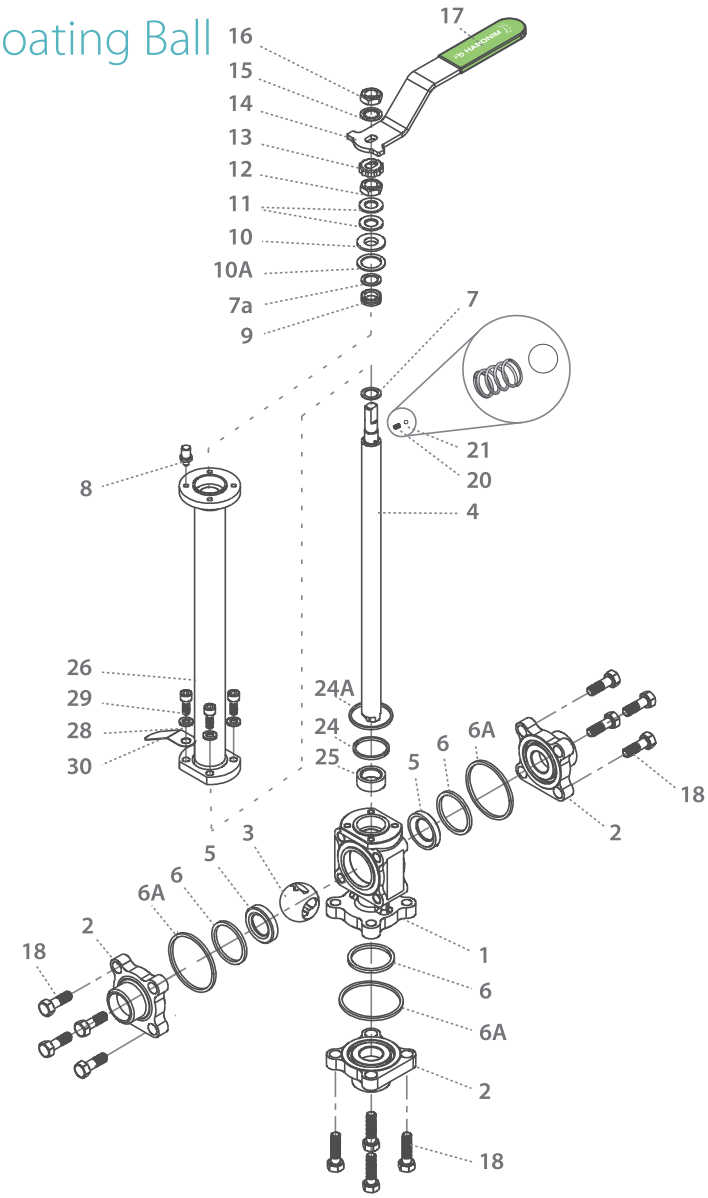

Item	Description	Material specifications	Qty.
1	Body	Acc. Ordering Code	1
2	End	Acc. Ordering Code	3
3	Ball	Acc. Ordering Code	1
4	Stem	Acc. Ordering Code	1
5*	Seat	Acc. Ordering Code	2
6*	Body seal	TFM	3
6A*	Secondery Seal	Graphite, TFM	2
7*	Stem thrust seal	PCTFE	1
7a*	Anti-abrasion ring	PCTFE	1
8	Stop pin	S. Steel	1
9*	Stem seal	TFM	1
10	Follower	S. Steel	1
10A	Slide bearing	S. Steel	1
11	Disc spring	S. Steel	2
12	Stem nut	S. Steel	1
13	Locking clip	S. Steel	1
14	Handle	S. Steel	1

Item	Description	Material specifications	Qty.
15	Serrated washer	S. Steel	1
16	Handle nut	S. Steel	1
17	Sleeve	PVC	1
18	Body bolt	S. Steel	12
20	Anti-static spring	S. Steel	1
21	Anti-static plunger	S. Steel	1
23	Tag (not shown)	S. Steel	1
24*	Bonnet seal	TFM	1
24A*	Bonnet Secondery Seal	Acc. Ordering Code	1
25*	Stem bearing	PTFE	1
26	Bonnet	S. Steel	1
28	Bolt	S. Steel	12
30	Dog tag	S. Steel	1
26	Bonnet	S. Steel	1
28	Bolt	S. Steel	4
30	Dog tag	S. Steel	1

* Repair kit components

C61 C62 ½"-1½" | DN15-DN40 | CLASS 600

Cryogenic Multiport Floating Ball

Valve dimensions

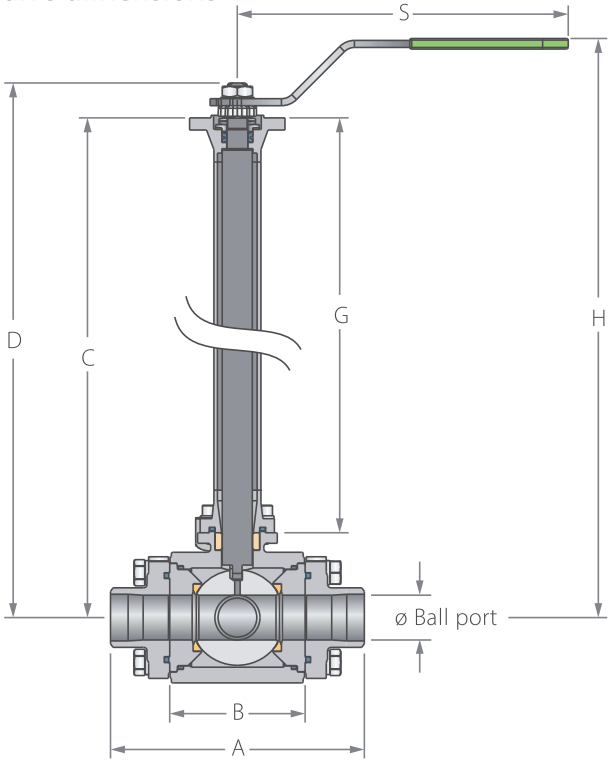

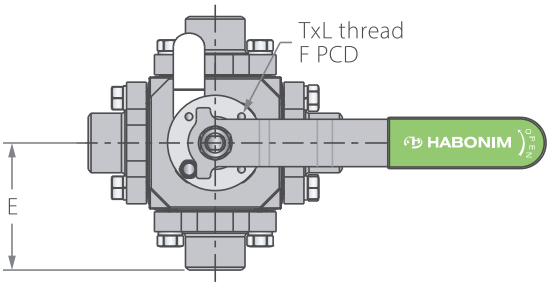

Preparation for actuation

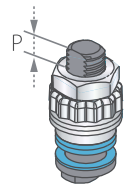

½" - 1½"
with nut

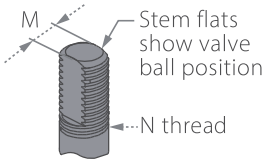

Valve Face To Face sizes are according to Habonim catalog data only, for Extended-weald/Flanged/Tri-clamp end see Face To Face sizes page.

Std. port	Full port	Unit	Ball port	A	B	Standard design					6.0" bonnet				E	S	M	N	P	F		TxL	Weight kg/lb	
						C	D	E	G	H	C	D	G	H									Std.	6.0 Bonnet
DN20	DN15	mm	14.3	108	62	341	358.5	304	384.9	189.4	206.9	152.4	233.3	224.52	54.3	187	7.5	7/16" UNF	7.2	(F04)	42	M5X7	3.65	3.33
¾"	½"	inch	0.56	4.25	2.44	13.43	14.11	11.97	15.15	7.46	8.15	6	9.19	8.84	2.14	7.36	0.3		0.28		1.65		8.04	7.34
DN25	DN20	mm	20.7	134.6	71.6	347	364.5	304	389.8	195.4	212.9	152.4	238.2	239.43	66.8	187	7.5	7/16" UNF	7.2	(F04)	42	M5X7	5.25	4.9
1"	¾"	inch	0.81	5.30	2.82	13.66	14.35	11.97	15.35	7.69	8.38	6	9.38	9.43	2.63	7.36	0.3		0.28		1.65		11.57	10.8
DN32	DN25	mm	25.5	143	76	352	369.5	304	396.9	200.4	217.9	152.4	245.3	244.43	71.8	187	7.5	7/16" UNF	8.5	(F04)	42	M5X7	7.42	6.85
1¼"	1"	inch	1	5.63	2.99	13.86	14.55	11.97	15.63	7.89	8.58	6	9.66	9.62	2.83	7.36	0.3		0.33		1.65		16.35	15.1
DN40	DN32	mm	31.65	158	91	353.4	382.9	304	408.1	201.8	231.3	152.4	256.5	257.13	79	237	8.71	9/16" UNF	8.5	(F05)	50	M6X8	9.12	8.55
1½"	1¼"	inch	1.25	6.22	3.58	13.91	15.07	11.97	16.07	7.94	9.11	6	10.1	10.12	3.11	9.33	0.34		0.33		1.97		20.1	18.84

Cryogenic Multiport Floating Ball

Components & materials

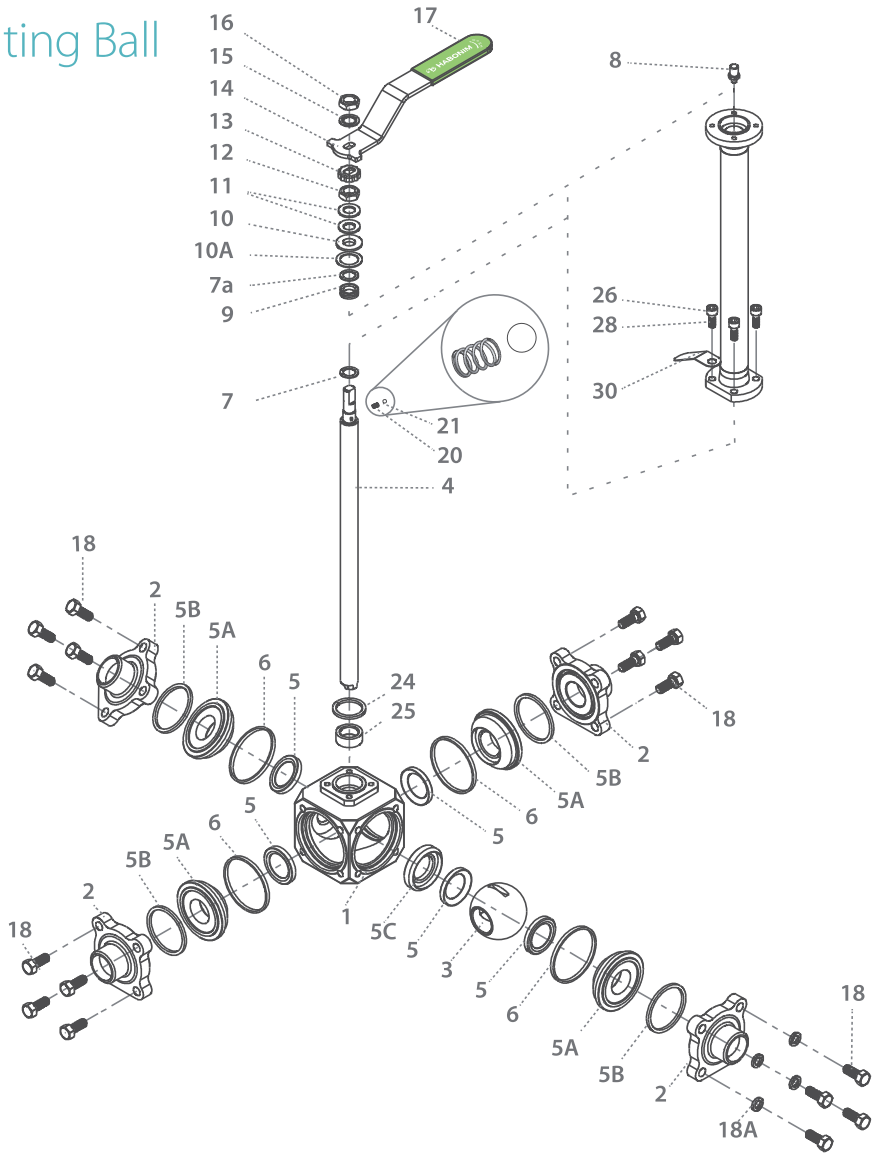

Item	Description	Material specifications	Qty.
1	Body	Acc. Ordering Code	1
2	End	Acc. Ordering Code	3/4**
3	Ball	Acc. Ordering Code	1
4	Stem	Acc. Ordering Code	1
5*	Seat	Acc. Ordering Code	4/5**
5A	Seat housing	S. Steel	3/4**
5B*	Seat seal	PTFE, Graphite	3/4**
5C	Seat support	A479 316/316L, B574 N06022, Bronze RG5	1
6*	Body seal	PTFE, Graphite	3/4**
7*	Stem thrust seal	PCTFE	1
7a*	Anti-abrasion ring	PCTFE	1
8	Stop pin	S. Steel	1
9*	Stem seal	TFM	1
10	Follower	S. Steel	1
10A	Slide bearing	S. Steel	1
11	Disc spring	S. Steel	2
12	Stem nut	S. Steel	1

Item	Description	Material specifications	Qty.
13	Locking clip	S. Steel	1
14	Handle	S. Steel	1
15	Serrated washer	S. Steel	1
16	Handle nut	S. Steel	1
17	Sleeve	PVC	1
18	Body bolt	S. Steel	12/16**
20	Anti-static spring	S. Steel	1
21	Anti-static plunger	S. Steel	1
23	Tag (not shown)	S. Steel	1
24*	Bonnet seal	PTFE, Graphite	1
25*	Stem bearing	PTFE	1
26	Bonnet	S. Steel	1
28	Bolt	S. Steel	4
30	Dog tag	S. Steel	1

* Repair kit components

** 61 is Multiport with three horizontal ports, 62 is Multiport with four horizontal ports

C61 C62 2"-4" | DN50-DN100 | CLASS 300

Cryogenic Floating Ball Multiport

Valve dimensions

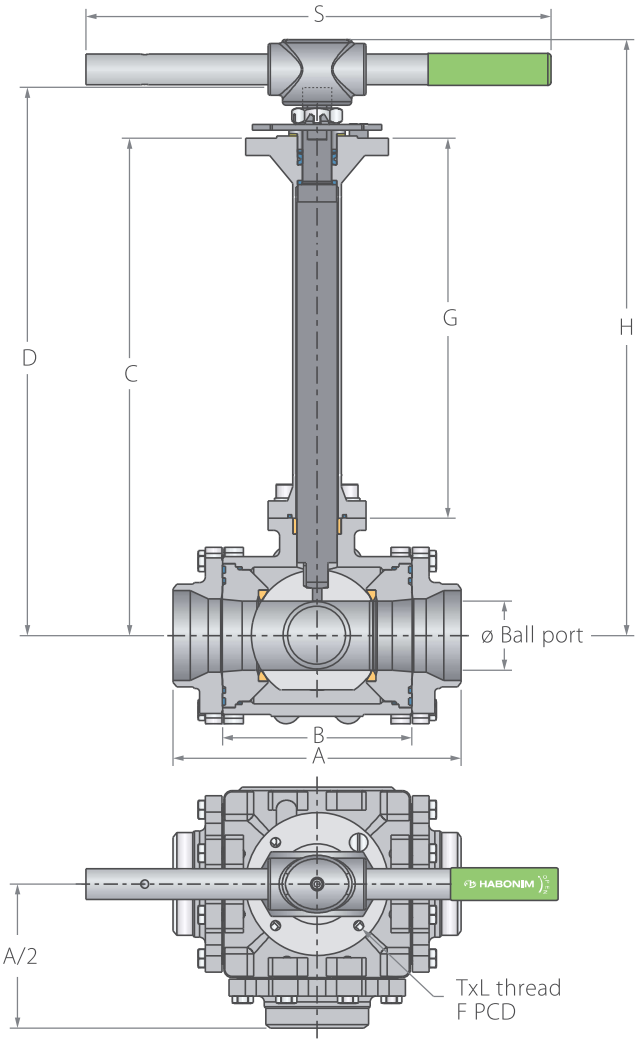

Preparation for actuation

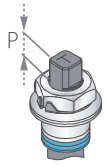

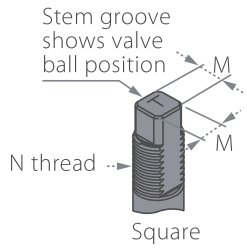

Valve Face To Face sizes are according to Habonim catalog data only, for Extended-weald/Flanged/Tri-clamp end see Face To Face sizes page.

Std. port	Full port	Unit	Ball port	A	B	Standard design					6.0" bonnet				S	M	M DD	N	P	F		TxL	Weight kg/lb	
						C	D	E	G	H	C	D	G	H									Std.	6.0 Bonnet
DN50	DN40	mm	38.1	178.8	107.2	397.1	438.7	327.5	465.9	222	263.6	152.4	290.8	224.52	400	13.9	13.9	M20X2.5	14.36	(F07)	70	M8X8	24.7	23.25
2"	1½"	inch	1.5	7.04	4.22	15.63	17.27	12.89	18.34	8.74	10.38	6	11.45	8.84	15.75	0.55	0.55		0.57		2.76		54.44	51.24
DN65	DN50	mm	48	210	125	406.6	453.1	327.5	480.3	231.5	278	152.4	305.2	239.43	400	18.9	15.9	1"-14 UNS-2A	16.7	(F10)	102	M10X15	24.7	23.25
2½"	2"	inch	1.89	8.27	4.92	16.01	17.84	12.89	18.91	9.11	10.94	6	12.02	9.43	15.75	0.74	0.63		0.66		4.02		54.44	51.24
DN80	DN65	mm	60	249.8	164	486.75	555.85	385	-	254.15	323.25	152.4	-	244.43	-	28.45	23.75	1-½"-12 UNF-2A	26.2	(F12)	125	M12X15	42.4	41.2
3"	2½"	inch	2.36	9.83	6.46	19.16	21.88	15.16	-	10.01	12.73	6	-	9.62	-	1.12	0.94		1.03		4.92		93.45	90.8
DN100	DN80	mm	76	309.8	205	519.5	588.6	385	-	286.9	356	152.4	-	257.13	-	28.45	23.75	1-½"-12 UNF-2A	26.2	(F12)	125	M12X15	66.4	65.2
4"	3"	inch	2.99	12.2	8.07	20.45	23.17	15.16	-	11.3	14.02	6	-	10.12	-	1.12	0.94		1.03		4.92		146.35	143.7

Cryogenic Floating Ball Multiport

Components & materials

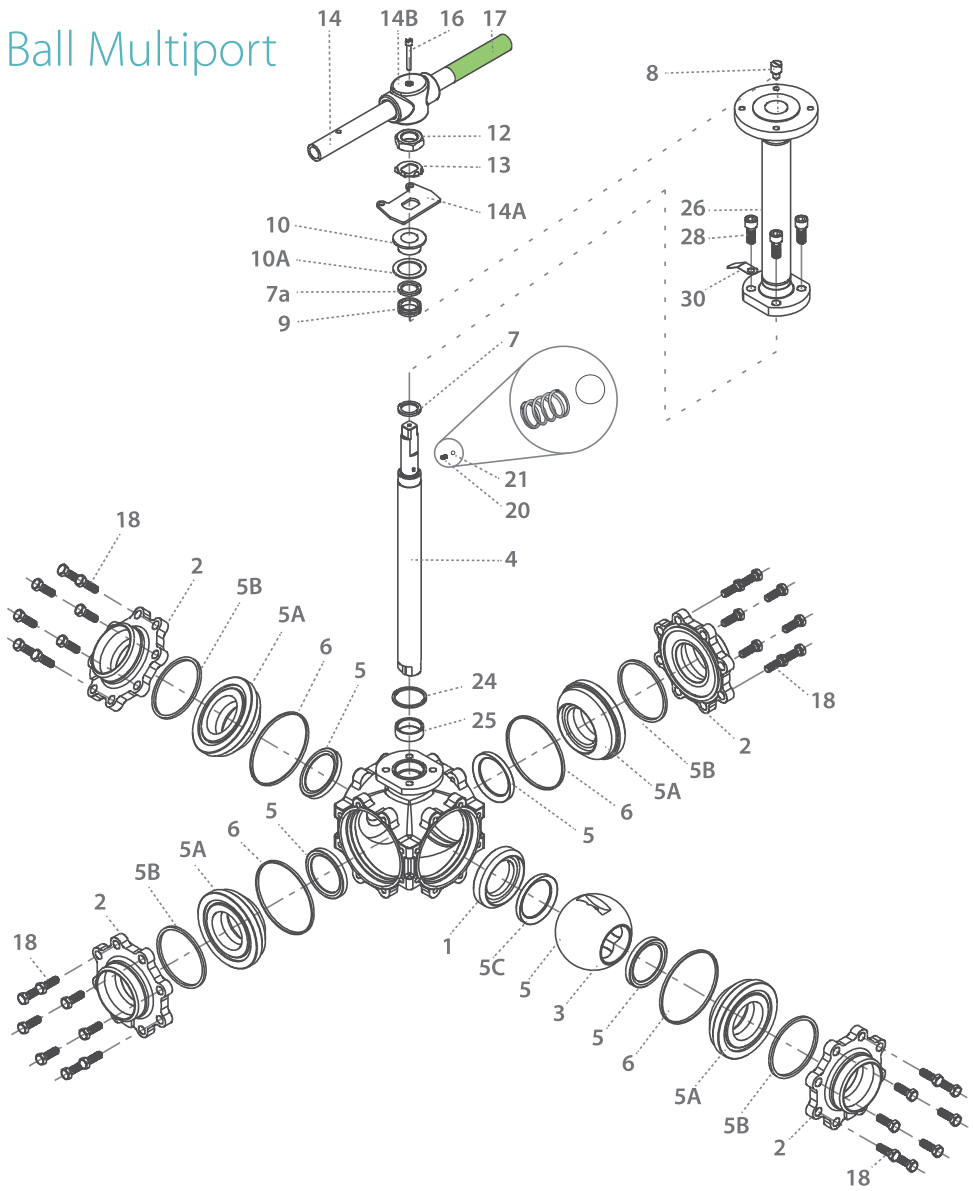

Item	Description	Material specifications	Qty.
1	Body	Acc. Ordering Code	1
2	End	Acc. Ordering Code	3
3	Ball	Acc. Ordering Code	1
4	Stem	Acc. Ordering Code	1
5*	Seat	Acc. Ordering Code	4
5A	Seat housing	S. Steel	3
5B*	Seat seal	PTFE, Graphite	3
5C	Seat support	A479 316/316L, B574 N06022, Bronze RG5	1
6*	Body seal	PTFE, Graphite	3
7*	Stem thrust seal	PCTFE	1
7a*	Anti-abrasion ring	PCTFE	1
8	Stop pin	S. Steel	1
9*	Stem seal	TFM	1
10	Follower	S. Steel	1
10A	Slide bearing	S. Steel	1
11	Disc spring	S. Steel	2

Item	Description	Material specifications	Qty.
12	Stem nut	S. Steel	1
13	Tab lock washer	S. Steel	1
14**	Handle	S. Steel	1
14A	Stop plate	S. Steel	1
14B	Wrench head	S. Steel	1
16	Wrench bolt	S. Steel	1
17	Sleeve	PVC	1
18	Body bolt	S. Steel	12-24
18A	Spring washer	S. Steel	12-24
20	Anti-static spring	S. Steel	2
21	Anti-static plunger	S. Steel	2
23	Tag (not shown)	S. Steel	1
24*	Bonnet seal	PTFE, Graphite	1
25*	Stem bearing	PTFE	1
26	Bonnet	S. Steel	1
28	Bolt	S. Steel	4
30	Dog tag	S. Steel	1

* Repair kit components

** Gear operator should be used for size 3" DN80 and above (handle components are not included)

C61 C62

Face To Face Sizes

Valve Size	Unit	B		A-XBW		A-ETO	A-Flanged CLASS 150+300		A-Flanged CLASS 600		A-Flanged DIN		A-TC
		Std. port	Full port	Std. port	Full port	Std. port	Std. port	Full port	Std. port	Full port	Std. port	Full port	Full port
DN10	mm	62	62	182	184.4	150							
⅜"	inch	2.4	2.4	7.2	7.3	5.9							
DN15	mm	62	62	182	184.4	178.4	181.4	177.4	206.4	177.4	171.4	167.4	130.2
½"	inch	2.4	2.4	7.2	7.3	7	7.1	6.9	8.1	6.9	6.7	6.5	5.1
DN20	mm	62	71.6	184.4	208.6	184.4	189.4	191.9	189.4	191.9	187.4	189.9	139
¾"	inch	2.4	2.8	7.3	8.2	7.3	7.4	7.5	7.4	7.5	7.3	7.5	5.5
DN25	mm	71.6	76	208.6	214	204	204.9	199.7	256.0	199.7	199.9	194.7	154.2
1"	inch	2.8	3	8.2	8.4	8	8.0	7.9	59.0	7.9	7.9	7.7	6.1
DN32	mm	76	91	214	232	214	212.7	220.6	212.7	220.6	214.7	222.6	
1¼"	inch	3	3.6	8.4	9.1	8.4	8.4	8.7	8.4	8.7	8.5	8.8	
DN40	mm	91	107.2	232	251.2	226.6	232.6	240.9	283.6	240.9	242.6	250.9	182.4
1½"	inch	3.6	4.2	9.1	9.9	8.9	9.2	9.5	11.2	9.5	9.6	9.9	7.2
DN50	mm	107.2	125	251.2	285	244.4	266.9	268.4	342.8	268.4	280.9	282.4	209.8
2"	inch	4.2	4.9	9.9	11.2	9.6	10.5	10.5	13.5	10.5	11.0	11.1	8.3
DN65	mm	125	164	285	364	275	293.4	321.6	293.4	410.6	342.4	370.6	265.4
2½"	inch	4.9	6.5	11.2	14.3	10.8	11.5	12.7	11.5	16.2	13.5	14.6	10.4
DN80	mm	164	205	364	445	331	362.6	378.2	436.6	452.2	390.6	452.2	296.4
3"	inch	6.5	8.1	14.3	17.5	13	14.3	14.9	17.2	17.8	15.4	17.8	11.7
DN100	mm	205		445		445	401.2		528.2		528.2		341.6
4"	inch	8.1		17.5		17.5	15.8		20.8		20.8		13.4

XBW / ETO

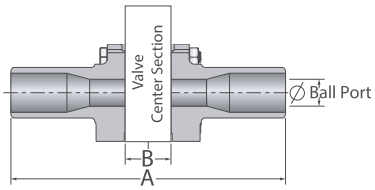

Flanged

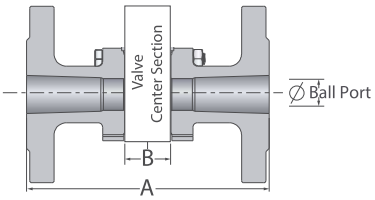

TC

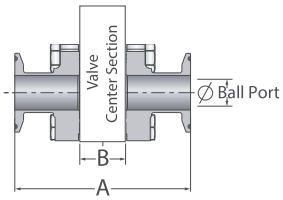

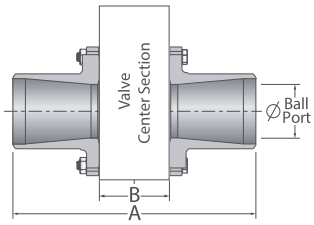

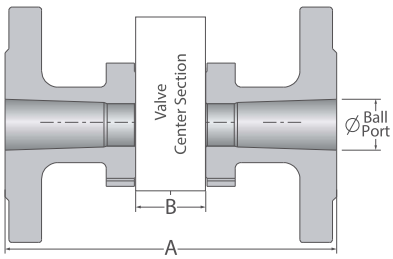

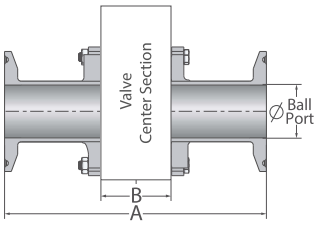

Cryogenic Floating Ball Multiport - Ordering Code System

"Mandatory option" options are marked with green background | "Standard offer" options are marked with light green background

1	2	3	4	5	6	7	8	9	10	11	12	13	14	15	16	17	18	19	20	21	22	23	24	.	.	30
6	0		F	D	C	4	7	W	-	6	6	6	M	A	A	G	/	B	W			-				
Size		Features				Series		Design		Body material	Ends material	Ball material	Stem material	Seat material	Inner Seal	Outer Seal		End connection					Special features			

Size (1-2)		
Code	inch	mm
05	½"	15
07	¾"	20
10	1"	25
12	1¼"	32
15	1½"	40
20	2"	50
25	2½"	65

* Full port only

Features (3-6)	
F	Fire safe
D	Diverter bottom entry
C	Cryogenic design
B	Full port

Series (7-8)	
47	3 Piece Floating

Design (9)	
W	Total HermetiX Integrity package

Body material (11)	
6	S. Steel

End material (12)	
6	S. Steel

Ball material (13)	
6	S. St. 316L

Stem material (14)	
M	High Strength S. Steel
6	S. Steel
Z	Inconel

Seat material (15)	
A	TFM
C	PCTFE
P	CF PTFE

Inner Seal Material (16)	
A	TFM
G	Expanded graphite

Outer Seal Material (17)	
G	Expanded graphite
A	TFM

Special Features (24-30)	
B	Body made from rolled bar
6.0	Short bonnet
90	90 degrees rotation
180	180 degrees rotation applicable for bottom entry diverter valve L

End connections	
Welded	
BW10	Buttweld schd. 10
BW	Buttweld schd. 40
XBW10	Extended buttweld schd. 10
XBW	Extended buttweld schd. 40
BW5	Buttweld schd. 5
BW80	Buttweld schd. 80
BWO *	Buttweld tube OD
BWD	Buttweld DIN 11860
BWI	buttweld ISO
SW	Socket weld
SWO *	Socket weld tube OD
XBW80	Extended Buttweal 80
XSW	Extended socket weld
ETO *	Extended tube OD
ETI	Extended buttweld ISO
ETD	Extended buttweld DIN

* Std. port only

Threaded	
NPT	ASME B1.20.1 - National Pipe Taper thread
MNPT	Male NPT
BSPT	EN 10226 - Pipe Taper thread
MBSPT	Male BSPT
BSPP	ISO228-1, DIN3852 - Pipe parallel thread
DIN3852	DIN3852 - Pipe Parallel thread
AS5202	SAE internal straight thread
Flanged	
150	ASME B16.5 #150 RF
300	ASME B16.5 #300 RF
600	ASME B16.5 #600 RF
900	ASME B16.5 #900 RF
PN16	EN1092 PN16 RF
PN40	EN1092 PN40 RF
PN63	EN1092 PN63 RF
PN100	EN1092 PN100 RF
PN160	EN1092 PN160 RF
Clamp	
LL *	Compression fitting (Imperial) - No nuts & Ferrules
LM *	Compression fitting (metric) - No nuts & Ferrules
LL-NF *	Compression fitting (Imperial) - with nuts & Ferrules
LM-NF *	Compression fitting (metric) - with nuts & Ferrules
TC *	Tri-Clamp
GR	Grayloc© compatible hub (Grayloc© is a registered trademark of Grayloc Products, L.L.C.)

* Std. port only

C61 C62

Cryogenic Floating Ball Multiport - Ordering Code System

"Mandatory option" options are marked with green background | "Standard offer" options are marked with light green background

1	2	3	4	5	6	7	8	9	10	11	12	13	14	15	16	17	18	19	20	21	22	23	24	25	26	27	28	...30
6	0		F	D	C	6	1	X	-	6	6	6	M	A	A		/	B	W			-	#	0	0	1	-		
Size		Features				Series[1]		Design		Body material	Ends material	Ball material	Stem material	Seat material	Body/seat seal			End connection					Flow pattern					Special Features

Size (1-2)		
Code	inch	mm
05 *	½"	15
07	¾"	20
10	1"	25
12	1¼"	32
15	1½"	40
20	2"	50
25	2½"	65
30	3"	80
40	4"	100

* Full port only

Features (3-6)	
C	Cryogenic design
F	Fire safe
B	Full port

Series (7-8)	
61	3 way Multiport Floating ball
62	4 way Multiport Floating ball

Design (9)	
X	HermetiX stem seal

Body material (11)	
6	S. Steel

End material (12)	
6	S. Steel

Ball material (13)	
6	S. St.

Stem material (14)	
M	High Strength S. Steel
6	S. Steel
Z	Inconel

Seat material (15)	
A	TFM
C	PCTFE
P	CF PTFE

Body/seat seal (16)	
A	TFM
G	Expanded graphite

Flow pattern code (23-26)	
#001-#028	3 way side entry
#029-#031	3 way bottom entry
#032-#063	4 way side entry
#064-#073	4 way bottom entry
#074-#085	5 way bottom entry

Special Features (24-30)	
6.0	Short bonnet

End connections	
Welded	
BW10	Buttweld schd. 10
BW	Buttweld schd. 40
XBW10	Extended buttweld schd. 10
XBW	Extended buttweld schd. 40
BW5	Buttweld schd. 5
BW80	Buttweld schd. 80
BWO *	Buttweld tube OD
BWD	Buttweld DIN 11860
BWI	buttweld ISO
SW	Socket weld
SWO *	Socket weld tube OD
XBW80	Extended Buttweal 80
XSW	Extended socket weld
ETO *	Extended tube OD
ETI	Extended buttweld ISO
ETD	Extended buttweld DIN

* Std. port only

Threaded	
NPT	ASME B1.20.1 - National Pipe Taper thread
MNPT	Male NPT
BSPT	EN 10226 - Pipe Taper thread
MBSPT	Male BSPT
BSPP	ISO228-1, DIN3852 - Pipe parallel thread
DIN3852	DIN3852 - Pipe Parallel thread
AS5202	SAE internal straight thread
Flanged	
150	ASME B16.5 #150 RF
300	ASME B16.5 #300 RF
600	ASME B16.5 #600 RF
900	ASME B16.5 #900 RF
PN16	EN1092 PN16 RF
PN40	EN1092 PN40 RF
PN63	EN1092 PN63 RF
PN100	EN1092 PN100 RF
PN160	EN1092 PN160 RF
Clamp	
LL *	Compression fitting (Imperial) - **No** nuts & Ferrules
LM *	Compression fitting (metric) - **No** nuts & Ferrules
LL-NF *	Compression fitting (Imperial) - **with** nuts & Ferrules
LM-NF *	Compression fitting (metric) - **with** nuts & Ferrules
TC *	Tri-Clamp
GR	Grayloc© compatible hub (Grayloc© is a registered trademark of Grayloc Products, L.L.C.)

* Std. port only

C31 C32 C73 C74 C77 C78

Cryogenic Valves

FLOATING BALL

FLANGED

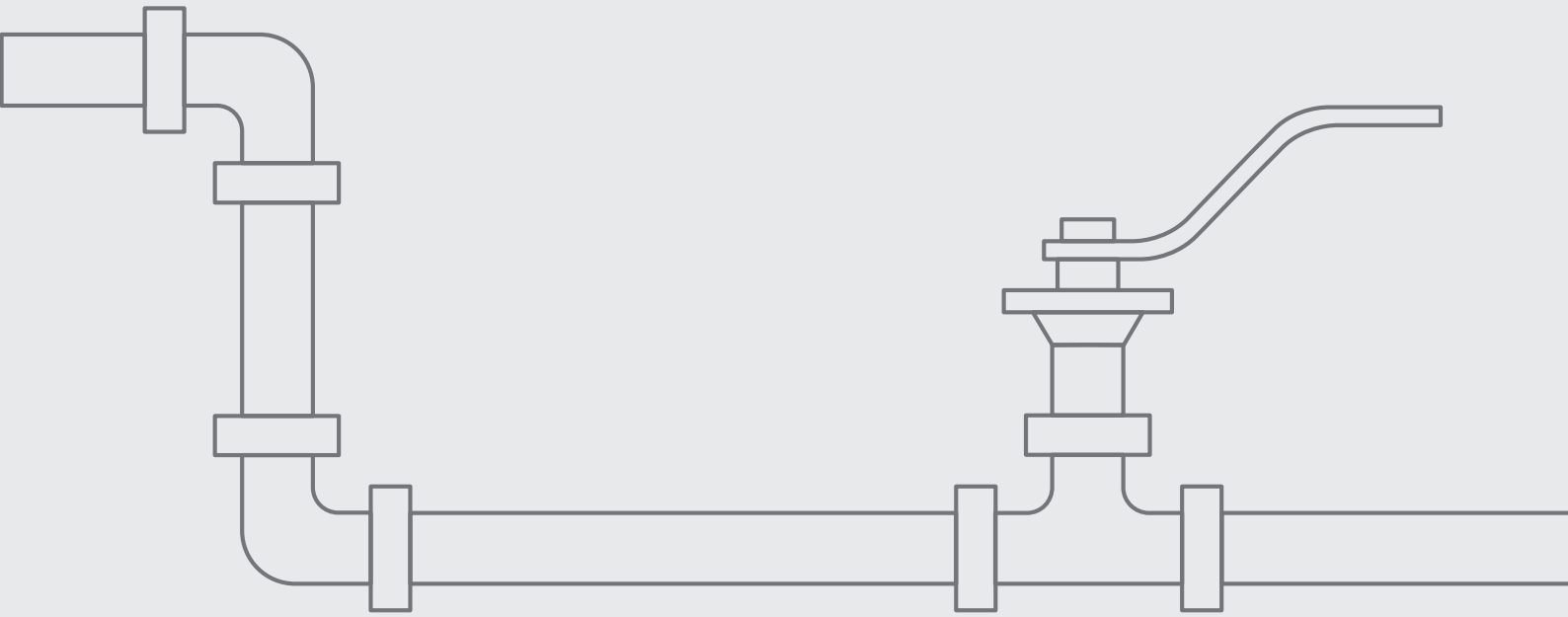

C31 C32 ½"-2" | DN15-DN50 | CLASS 150/300

Cryogenic Flanged Reduced Port Floating Ball

Valve dimensions

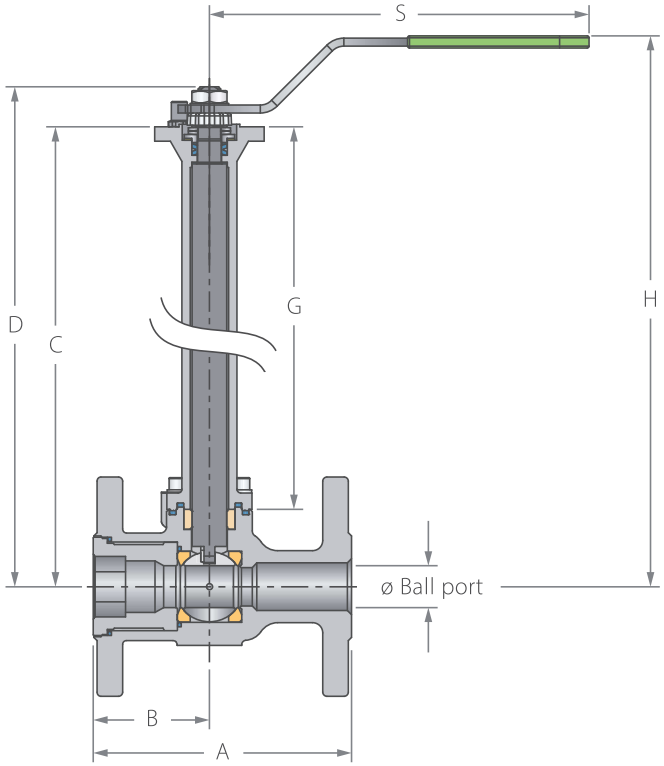

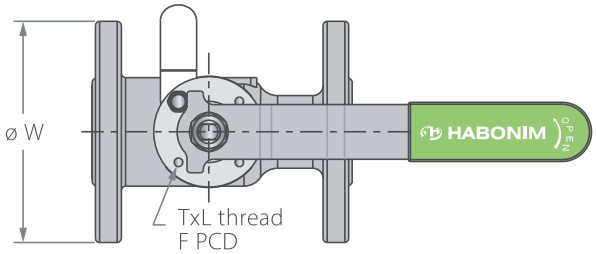

Preparation for actuation

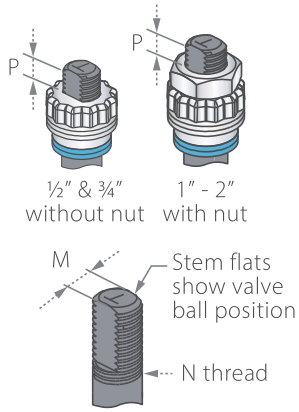

Std. port	Unit	Ball port	A_31	A_32	B	Standard design				6.0" bonnet				S	W	M	N	P	F		TxL	Weight kg/lb		Kv
						C	D	G	H	C	D	G	H									Std.	6.0"	Cv
DN15	mm	11.15	108	140	46	333	341.9	304	367	181.4	190.3	152.4	215.4	150	89	5.5	⅜" UNF	7.2	(F03)	36	M5X7	2.4	2.1	7
½"	inch	0.44	4.25	5.51	1.81	13.11	13.46	11.97	14.45	7.14	7.49	6	8.48	5.91	3.5	0.22		0.28		1.42		5.3	4.6	8
DN20	mm	14.30	117	152.4	49.35	335.4	344.3	304	369.4	183.8	192.7	152.4	217.8	150	98	5.5	⅜" UNF	7.2	(F03)	36	M5X7	3	2.7	10
¾"	inch	0.56	4.61	6	1.94	13.2	13.56	11.97	14.54	7.24	7.59	6	8.57	5.91	3.86	0.22		0.28		1.42		6.6	5.9	12
DN25	mm	20.60	127	165	57	342.15	359.65	304	387	190.55	208.05	152.4	235.4	187	108	7.54	7/16" UNF	7.2	(F04)	42	M5X7	4.2	3.85	27
1"	inch	0.81	5	6.5	2.24	13.47	14.16	11.97	15.24	7.5	8.19	6	9.27	7.36	4.25	0.3		0.28		1.65		9.3	8.5	32
DN40	mm	31.80	165	190.5	62.4	347.55	377.05	304	404	195.95	225.45	152.4	252.4	237	127	8.71	9/16" UNF	8	(F05)	50	M6X8	7	6.43	70
1½"	inch	1.25	6.5	7.5	2.46	13.68	14.84	11.97	15.91	7.71	8.88	6	9.94	9.33	5	0.34		0.31		1.97		15.4	14.2	82
DN50	mm	38.10	178	216	68	352.25	381.75	304	406	200.65	230.15	152.4	254.4	237	152	8.71	9/16" UNF	8.5	(F05)	50	M6X8	9.1	8.53	103
2"	inch	1.50	7.01	8.5	2.68	13.87	15.03	11.97	15.98	7.9	9.06	6	10.02	9.33	5.98	0.34		0.33		1.97		20.1	18.8	120

Cryogenic Flanged Reduced Port Floating Ball

Components & materials

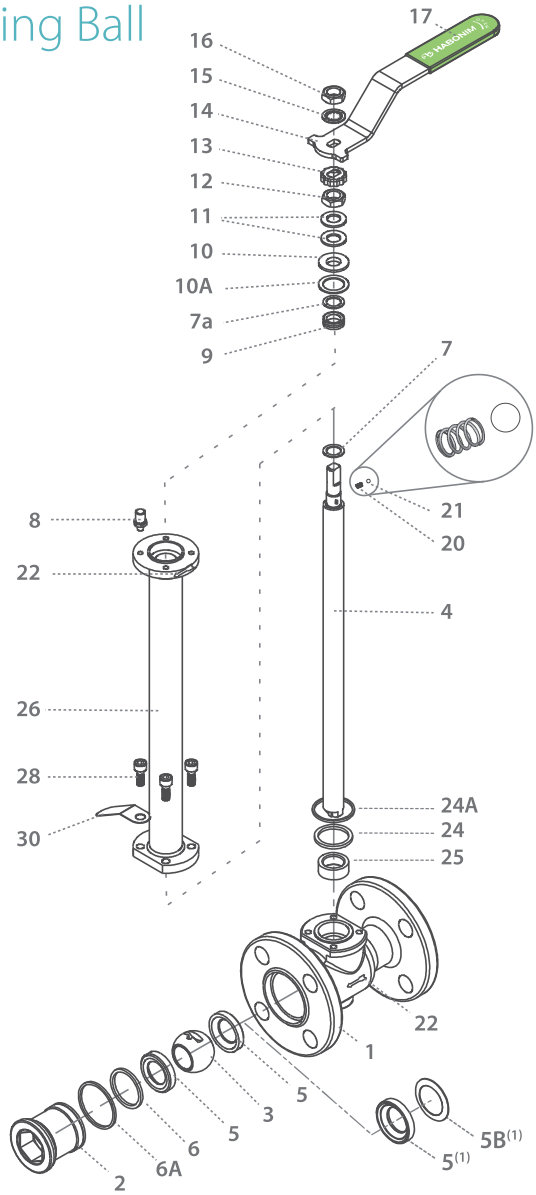

Item	Description	Material specifications	Qty.
1	Body	Acc. Ordering Code	1
2	Plug	Acc. Ordering Code	1
3	Ball	Acc. Ordering Code	1
4	Stem	Acc. Ordering Code	1
5*	Seat	Acc. Ordering Code	2
5B	Upstream seat spring	Inconel 718	1
6*	Inner seal	TFM	1
6A*	Outer seal	Acc. Ordering Code	1
7*	Stem thrust seal	PCTFE	1
7a*	Anti-abrasion ring	PCTFE	1
8	Stop pin	S. Steel	1
9*	Stem seal	TFM	1
10	Follower	S. Steel	1
10A	Slide bearing	S. Steel	1
11	Disc spring	S. Steel	2
12	Stem nut	S. Steel	1
13	Locking clip	S. Steel	1

Item	Description	Material specifications	Qty.
14	Handle	S. Steel	1
15	Serrated washer	S. Steel	1
16	Handle nut	S. Steel	1
17	Sleeve	PVC	1
20	Anti-static spring	S. Steel	1
21	Anti-static plunger	S. Steel	1
22	Arrow flow	S. Steel	2
23	Tag (not shown)	S. Steel	1
24*	Bonnet inner seal	TFM	1
24A*	Bonnet outer seal	Acc. Ordering Code	1
25*	Stem bearing	PTFE	1
26	Bonnet	S. Steel	1
28	Bolt	S. Steel	4
30	Dog tag	S. Steel	1

* Repair kit components

(1) Optional Dynemic seat design

C31 C32 3"-8" | DN80-DN200 | CLASS 150/300

Cryogenic Flanged Reduced Port Floating Ball

Valve dimensions

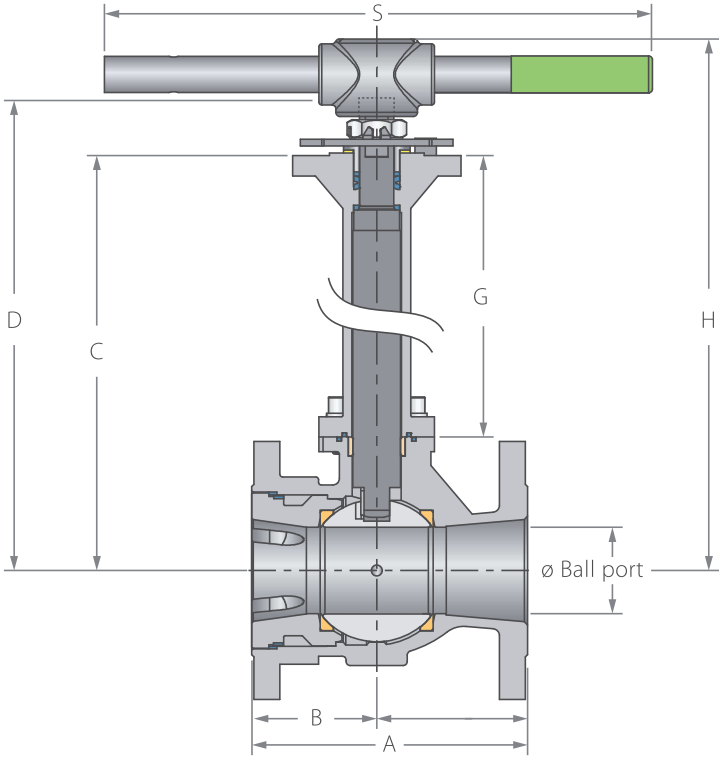

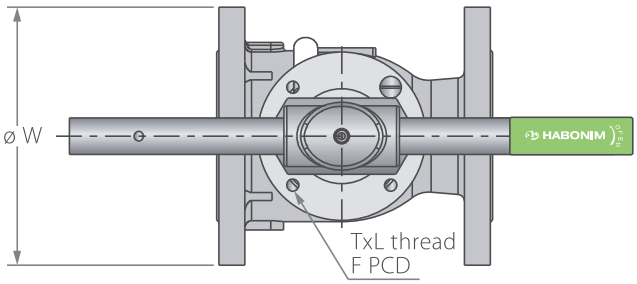

Preparation for actuation

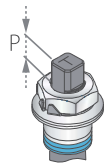

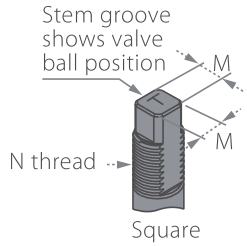

Std. port	Unit	Ball port	A_31	A_32	B	Standard design				6.0" bonnet				S	W	M	M DD	N	P	F		TxL	Weight kg/lb		Kv
						C	D	G	H	C	D	G	H										Std.	6.0"	Cv
DN80	mm	63.8	203.2	282	92.1	463.3	509.9	343.5	550.5	272.2	318.8	152.4	359.4	610	210	18.92	15.9	1"-14 UNS-2A	16.7	(F10)	102	M10X15	29	27.8	385
3"	inch	2.51	8	11.1	3.63	18.24	20.07	13.52	21.67	10.72	12.55	6	14.15	24.02	8.27	0.74	0.63		0.66		4.02		63.9	61.3	450
DN100	mm	82.8	228.6	304.8	101.6	457.6	504.2	343.5	543.4	266.5	313.1	152.4	352.3	610	254	18.92	15.9	1"-14 UNS-2A	16.7	(F10)	102	M10X15	44.6	43.4	615
4"	inch	3.26	9	12	4	18.02	19.85	13.52	21.39	10.49	12.33	6	13.87	24.02	10	0.74	0.63		0.66		4.02		98.3	95.7	720
DN150	mm	111.3	266.8	403.2	107.8	561	630.5	385	-	328.4	397.9	152.4	-	-	318	28.45	23.75	1½"-12 UNS-2A	26.2	(F12)	125	M12X15	92	89	872
6"	inch	4.38	10.5	15.87	4.24	22.09	24.82	15.16	-	12.93	15.67	6	-	-	12.52	1.12	0.94		1.03		4.92		202.4	195.8	1020
DN200	mm	144.4	292.1	419.1	142.25	570.1	639.6	385	-	337.5	407	152.4	-	-	381	28.45	23.75	1½"-12 UNS-2A	26.2	(F12)	125	M12X15	118.6	114.5	1607
8"	inch	5.69	11.5	16.5	5.6	22.44	25.18	15.16	-	13.29	16.02	6	-	-	15	1.12	0.94		1.03		4.92		261.4	252.4	1880

Cryogenic Flanged Reduced Port Floating Ball

Components & materials

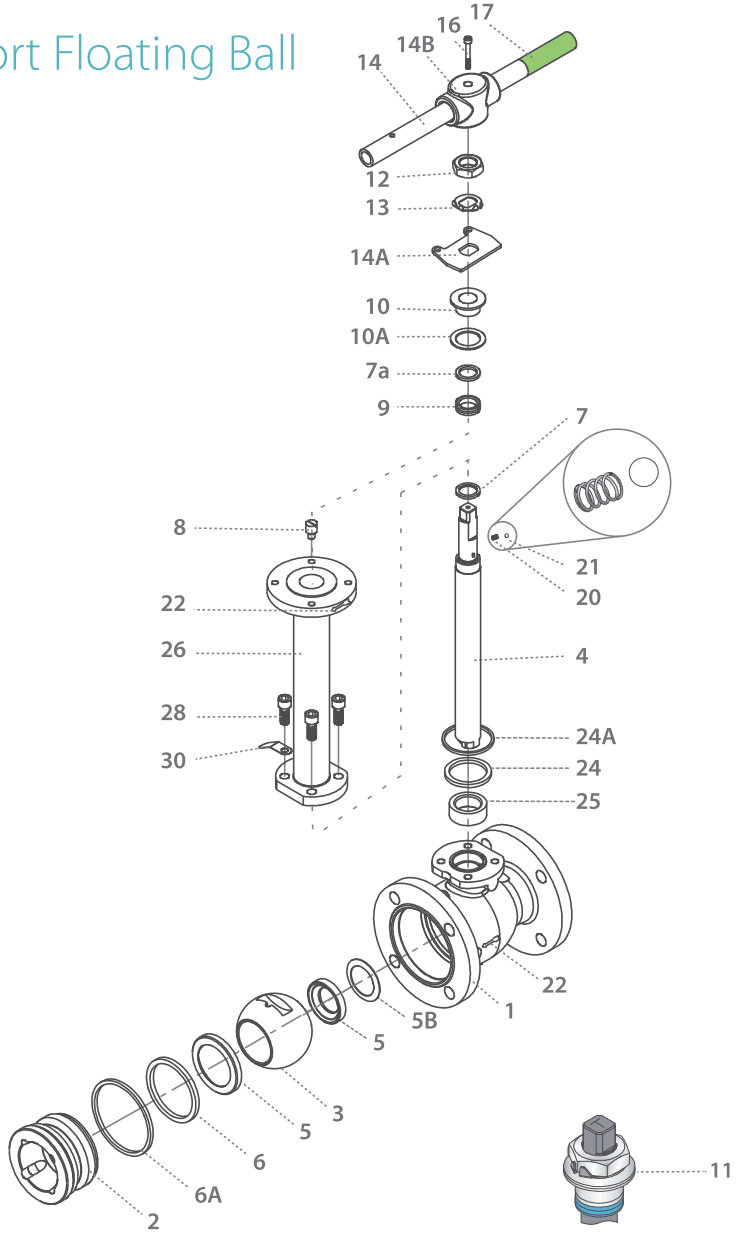

Item	Description	Material specifications	Qty.
1	Body	Acc. Ordering Code	1
2	Plug	Acc. Ordering Code	1
3	Ball	A351 CF8M, B574 N06022, Bronze RG5	1
4	Stem	Acc. Ordering Code	1
5*	Seat	Acc. Ordering Code	2
5B	Upstream seat spring	Inconel 718	1
6*	Inner seal	TFM	1
6A*	Outer seal	Acc. Ordering Code	1
7*	Stem thrust seal	PCTFE	1
7a*	Anti-abrasion ring	PCTFE	1
8	Stop pin	S. Steel	1
9*	Stem seal	TFM	1
10	Follower	S. Steel	1
10A	Slide bearing	S. Steel	1
11	Disc spring	S. Steel	2
12	Stem nut	S. Steel	1
13	Tab lock washer	S. Steel	1
14**	Handle	S. Steel	1

Item	Description	Material specifications	Qty.
14A	Stop plate	S. Steel	1
14B	Wrench head	S. Steel	1
16	Wrench bolt	S. Steel	1
17	Sleeve	PVC	1
20	Anti-static spring	S. Steel	2
21	Anti-static plunger	S. Steel	2
22	Arrow flow	S. Steel	2
23	Tag (not shown)	S. Steel	1
24*	Bonnet seal	PTFE, Graphite	1
25*	Stem bearing	PTFE	1
26	Bonnet	S. Steel	1
28	Bolt	S. Steel	4
30	Dog tag	S. Steel	1

* Repair kit components

** Gear operator should be used for size 6" DN150 and above (handle components are not included)

C73 C74 C78 ½"-1" | DN15-DN25
CLASS 150/300/PN 40

Cryogenic Flanged Full Port Floating Ball

Valve dimensions

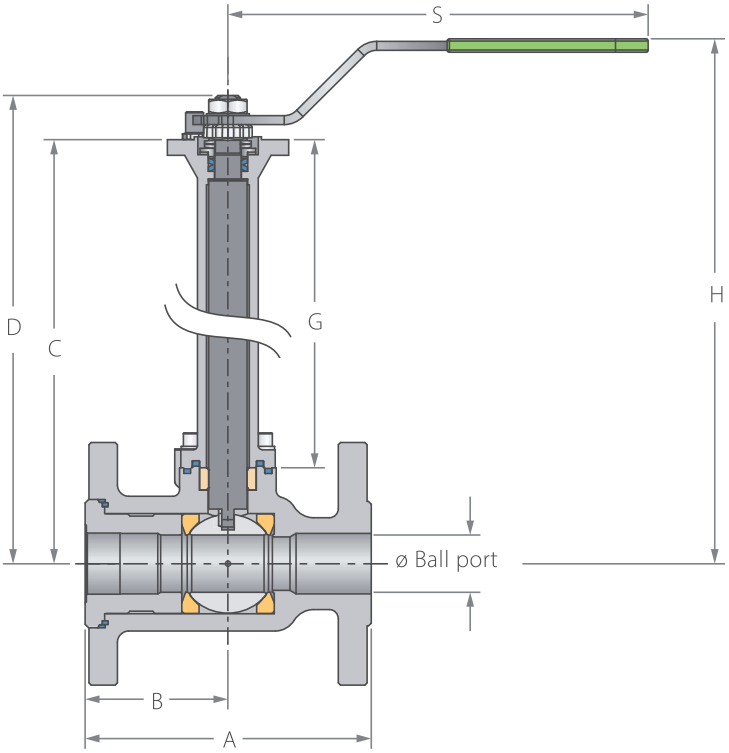

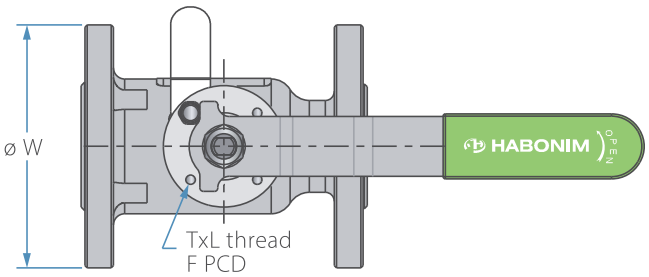

Preparation for actuation

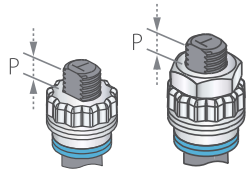

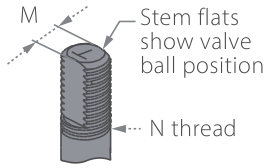

Full Port	Unit	Ball port	A_73	A_74	A_78		B	Standard design				6.0" bonnet				S	W	M	N	P	F		TxL	Weight	kg/lb	Kv
					F1	F4		C	D	G	H	C	D	G	H									Std.	6.0"	Cv
DN15	mm	14.3	108.2	140	130	115	48.2	335.4	344.3	304	400	183.8	192.7	152.4	248.4	150	89	5.5	⅜" UNF	7.2	(F03)	36	M5X7	2.6	2.28	26
½"	inch	0.56	4.26	5.51	5.12	4.53	1.9	13.2	13.56	11.97	15.75	7.24	7.59	6	9.78	5.91	3.5	0.22		0.28		1.42		5.73	5.03	30
DN20	mm	20.6	117	153	150	120	59	342.15	359.65	304	406.8	190.55	208.05	152.4	255.2	187	98	7.54	7/16" UNF	7.2	(F04)	42	M5X7	3.8	3.45	43
¾"	inch	0.81	4.61	6.02	5.91	4.72	2.32	13.47	14.16	11.97	16.02	7.5	8.19	6	10.05	7.36	3.86	0.3		0.28		1.65		8.38	7.60	50
DN25	mm	25.4	127	165	160	125	64	346.65	364.15	304	411.3	195.05	212.55	152.4	259.7	187	108	7.54	7/16" UNF	7.2	(F04)	42	M5X7	4.6	4.25	85
1"	inch	1	5	6.5	6.3	4.92	2.52	13.65	14.34	11.97	16.19	7.68	8.37	6	10.22	7.36	4.25	0.3		0.28		1.65		10.14	9.37	105

C73 C74 C78 ½"-1" | DN15-DN25
CLASS 150/300/PN 40

Cryogenic Flanged Full Port Floating Ball

Components & materials

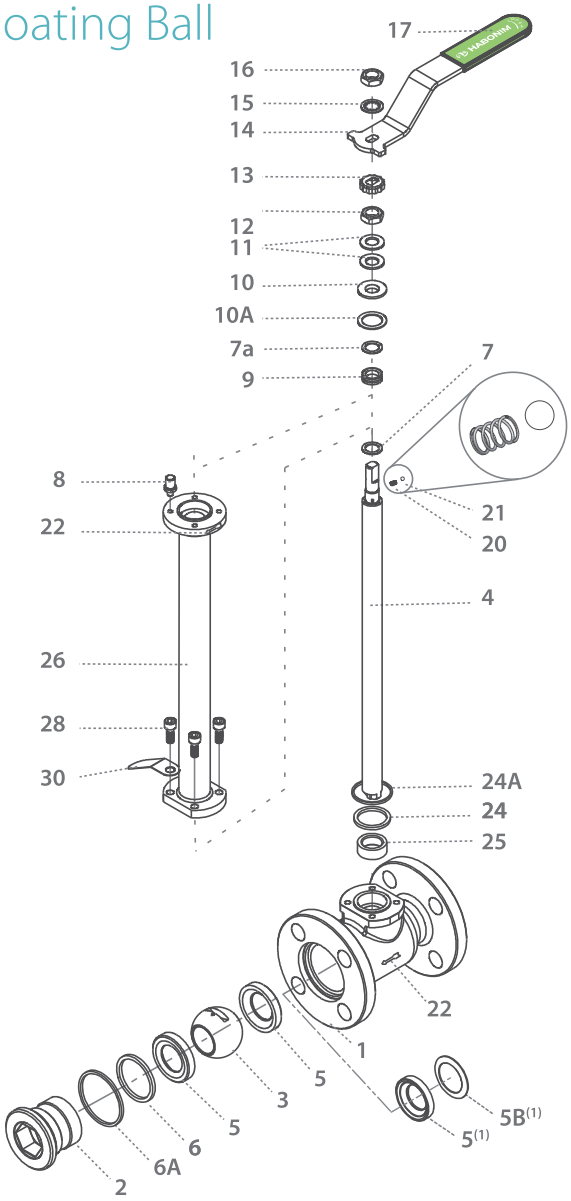

Item	Description	Material specifications	Qty.
1	Body	Acc. Ordering Code	1
2	Plug	Acc. Ordering Code	1
3	Ball	Acc. Ordering Code	1
4	Stem	Acc. Ordering Code	1
5*	Seat	Acc. Ordering Code	2
5B	Upstream seat spring	Inconel 718	1
6*	Inner seal	TFM	1
6A*	Outer seal	Acc. Ordering Code	1
7*	Stem thrust seal	PCTFE	1
7a*	Anti-abrasion ring	PCTFE	1
8	Stop pin	S. Steel	1
9*	Stem seal	TFM	1
10	Follower	S. Steel	1
10A	Slide bearing	S. Steel	1
11	Disc spring	S. Steel	2
12	Stem nut	S. Steel	1
13	Locking clip	S. Steel	1

Item	Description	Material specifications	Qty.
14	Handle	S. Steel	1
15	Serrated washer	S. Steel	1
16	Handle nut	S. Steel	1
17	Sleeve	PVC	1
20	Anti-static spring	S. Steel	1
21	Anti-static plunger	S. Steel	1
22	Arrow flow	S. Steel	2
23	Tag (not shown)	S. Steel	1
24*	Bonnet inner seal	TFM	1
24A*	Bonnet outer seal	Acc. Ordering Code	1
25*	Stem bearing	PTFE	1
26	Bonnet	S. Steel	1
28	Bolt	S. Steel	4
30	Dog tag	S. Steel	1

* Repair kit components

(1) Optional Dynemic seat design

C73 C74 C78

1½"-2" | DN40-DN50
CLASS 150/300/PN 40

Cryogenic Flanged Full Port Floating Ball

Valve dimensions

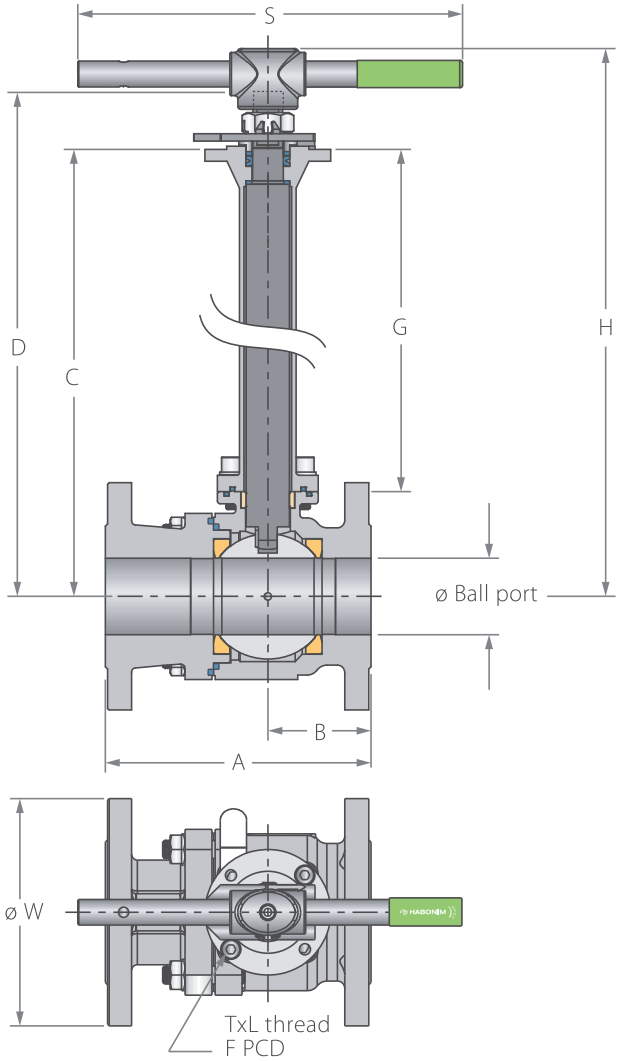

Preparation for actuation

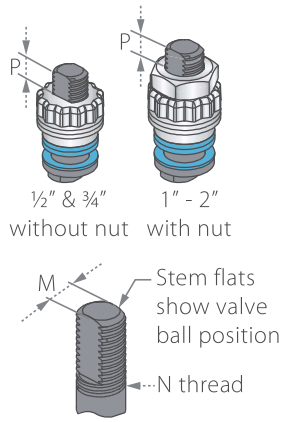

Full Port	Unit	Ball port	A_73	A_74	A_78		B	Standard design				6.0" bonnet				S	W	M	N	P	F		TxL	Weight	kg/lb	Kv
					F1	F4		C	D	G	H	C	D	G	H									Std.	6.0"	Cv
DN40	mm	38.1	165	190.5	200	-	68	352.3	381.8	304	406.6	200.65	230.15	152.4	255	237	127	8.71	9/16" UNF	8.5	(F05)	50	M6X8	8.5	7.93	214
1½"	inch	1.5	6.5	7.5	7.87	-	2.68	13.87	15	11.97	16.01	7.9	9.06	6	10.04	9.33	5	0.34		0.33		1.97		18.73	17.48	250
DN50	mm	51	178	216	230	150	69	397.5	439.1	327.5	430.35	222.4	264	152.4	255.25	400	152	13.9	M20x2.5	13.5	(F07)	70	M8X8	16	14.5	410
2"	inch	2.01	7.01	8.5	9.06	5.91	2.72	15.65	17.29	12.89	16.94	8.76	10.39	6	10.05	15.75	5.98	0.55		0.53		2.76		35.2	31.9	480

Cryogenic Flanged Full Port Floating Ball

Components & materials

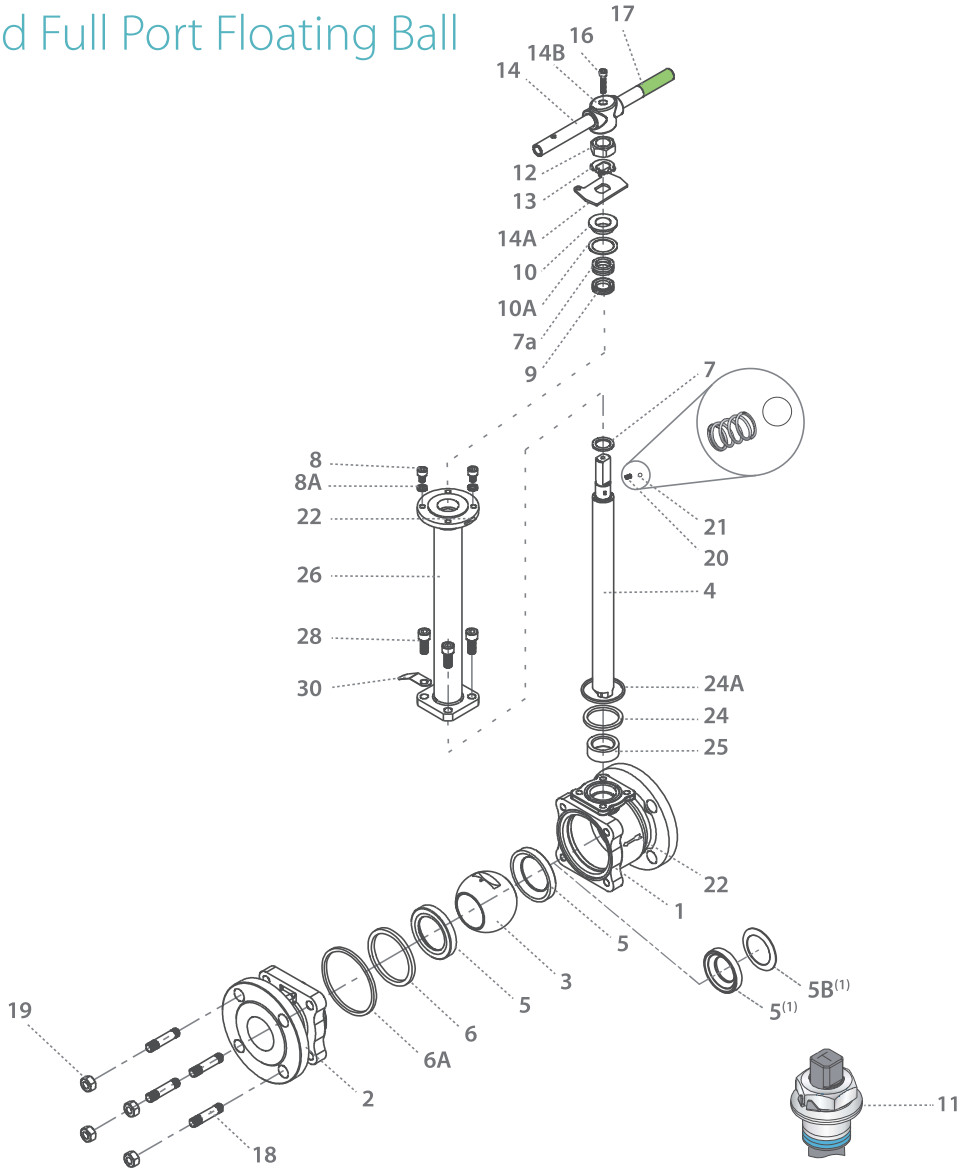

Item	Description	Material specifications	Qty.
1	Body	Acc. Ordering Code	1
2	End	Acc. Ordering Code	1
3	Ball	Acc. Ordering Code	1
4	Stem	Acc. Ordering Code	1
5*	Seat	Acc. Ordering Code	2
5B	Upstream seat spring	Inconel 718	1
6*	Inner seal	TFM	1
6A*	Outer seal	Acc. Ordering Code	1
7*	Stem thrust seal	PCTFE	1
7a*	Anti-abrasion ring	PCTFE	1
8	Stop bolt	S. Steel	2
8A	Spring washer	S. Steel	2
9*	Stem seal	TFM, Graphite	1
10	Follower	S. Steel	1
10A	Slide bearing	S. Steel	1
11	Disc spring	S. Steel	2
12	Stem nut	S. Steel	1
13	Tab lock washer	S. Steel	1
14	Handle	S. Steel	1

Item	Description	Material specifications	Qty.
14A	Stop plate	S. Steel	1
14B	Wrench head	S. Steel	1
16	Wrench bolt	S. Steel	1
17	Sleeve	PVC	1
18	Body bolt	S. Steel	4
19	Body Nut	EN3506-2 A4-80, A194 8M	4
20	Anti-static spring	S. Steel	1
21	Anti-static plunger	S. Steel	1
22	Arrow flow	S. Steel	2
23	Tag (not shown)	S. Steel	1
24*	Bonnet inner seal	TFM	1
24A*	Bonnet outer seal	Acc. Ordering Code	1
25*	Stem bearing	PTFE	1
26	Bonnet	S. Steel	1
28	Bolt	S. Steel	4
30	Dog tag	S. Steel	1

* Repair kit components

(1) Optional Dynemic seat design

C73 C74 C77 3"-8"[1] | DN80-DN200
CLASS 150/300/PN 16

Cryogenic Flanged Full Port Floating Ball

Valve dimensions

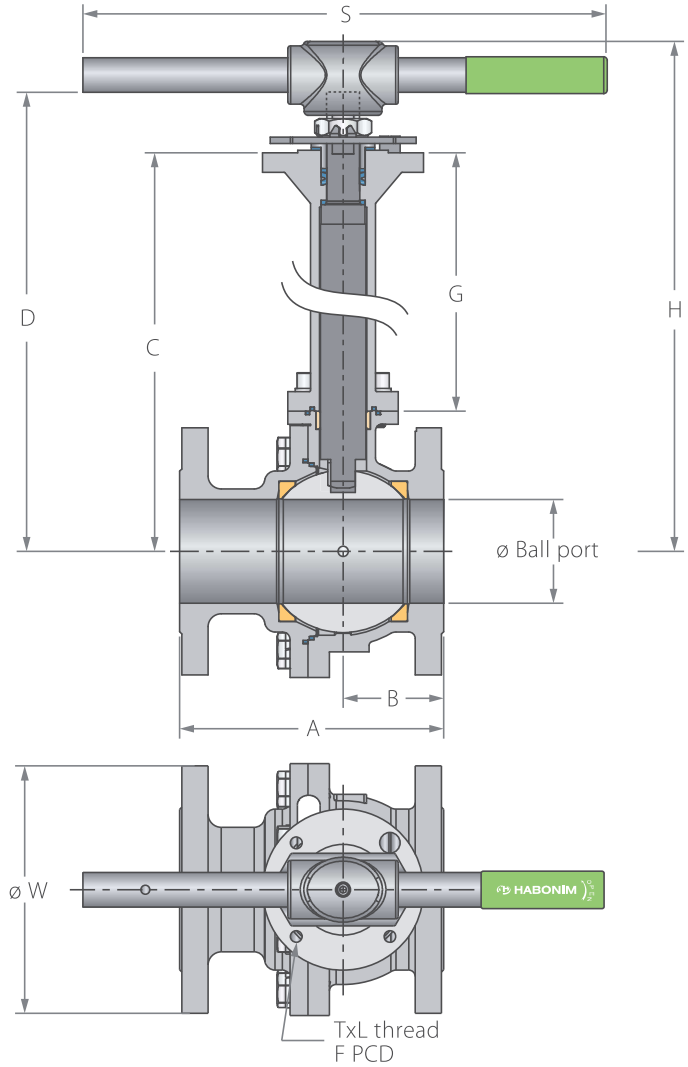

Preparation for actuation

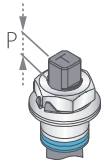

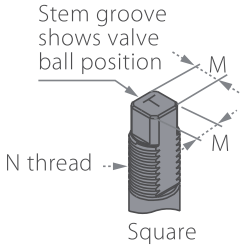

Full Port	Unit	Ball port	A_73	A_74	A_77		B	Standard design				6.0" bonnet				S	W	M	M DD	N	P	F		TxL	Weight kg/lb		Kv
					F1,F5	F4		C	D	G	H	C	D	G	H										Std.	6.0"	Cv
DN80	mm	80	203	282	310	180	77.5	441.5	488.1	343.5	538.6	250.4	297	152.4	347.5	610	190.5	18.9	15.9	1"-14 UNS-2A	16.7	(F10)	102	M10X15	27	25	1111
3"	inch	3.15	7.99	11.1	12.2	7.09	3.05	17.38	19.22	13.52	21.2	9.86	11.69	6	13.68	24.02	7.5	0.74	0.63		0.66		4.02		59.4	41.44	1300
DN100	mm	100	229	305	350	190	84.5	467.5	514.1	343.5	566.6	276.4	323	152.4	375.5	610	230	18.9	15.9	1"-14 UNS-2A	16.7	(F10)	102	M10X15	44	42	2051
4"	inch	3.94	9.02	12.01	13.78	7.48	3.33	18.41	20.24	13.52	22.31	10.88	12.72	6	14.78	24.02	9.06	0.74	0.63		0.66		4.02		67.22	64.58	2379
DN150	mm	150	394	404	350	OPT	163.5	564	633.5	385	-	331.4	400.9	152.4	-	-	279.4	28.45	23.75	1-½"-12 UNF-2A	26.2	(F12)	125	M12X15	97	93.5	4615
6"	inch	5.91	15.51	15.91	1378	OPT	6.44	22.2	24.94	15.16	-	13.05	15.78	6	-	-	11	1.12	0.94		1.03		4.92		154.28	145.24	5400
DN200	mm	200	457	502	-	-	242.6	627	627	385	-	394.4	463.9	152.4	-	-	343	35.9	35.9	2" UN-2A	40	(F14)	140	M16X20	210	203	7949
8"	inch	7.87	17.99	19.76	-	-	9.55	24.69	24.69	15.16	-	15.53	18.26	6	-	-	13.5	1.41	1.41		1.57		5.51		231.42	222.38	9300

(-) Due to high valve torque, pipe handle cannot be used. A manual gear or automation means should be used to operate the valve.

(1) C77 up to 6"

C73 C74 C77 3"-8"[1] | DN80-DN200
CLASS 150/300/PN 16

Cryogenic Flanged Full Port Floating Ball

Components & materials

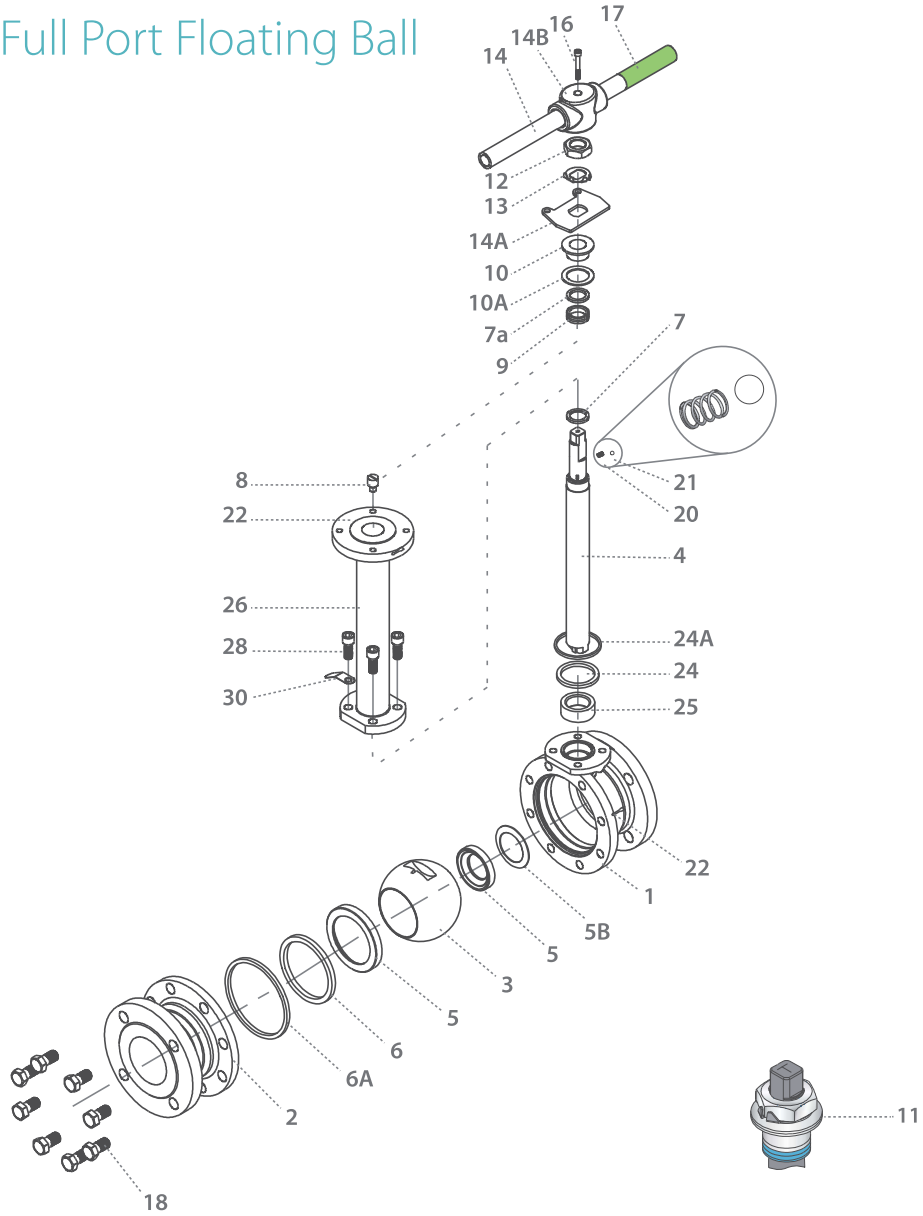

Item	Description	Material specifications	Qty.
1	Body	Acc. Ordering Code	1
2	End	Acc. Ordering Code	1
3	Ball	Acc. Ordering Code	1
4	Stem	Acc. Ordering Code	1
5*	Seat	Acc. Ordering Code	2
5B	Upstream seat spring	Inconel 718	1
6*	Inner seal	TFM	1
6A*	Outer seal	Acc. Ordering Code	1
7*	Stem thrust seal	PCTFE	1
7a*	Anti-abrasion ring	PCTFE	1
8	Stop pin	S. Steel	1
9*	Stem seal	TFM	1
10	Follower	S. Steel	1
10A	Slide bearing	S. Steel	1
11	Disc spring	S. Steel	2
12	Stem nut	S. Steel	1
13	Tab lock washer	S. Steel	1
14**	Handle	S. Steel	1
14A	Stop plate	S. Steel	1

Item	Description	Material specifications	Qty.
14B	Wrench head	S. Steel	1
16	Wrench bolt	S. Steel	1
17	Sleeve	PVC	1
18	Body bolt	S. Steel	8-10
20	Anti-static spring	S. Steel	2
21	Anti-static plunger	S. Steel	2
22	Arrow flow	S. Steel	2
23	Tag (not shown)	S. Steel	1
24*	Bonnet inner seal	TFM	1
24A*	Bonnet outer seal	Acc. Ordering Code	1
25*	Stem bearing	PTFE	1
26	Bonnet	S. Steel	1
28	Bolt	S. Steel	4
30	Dog tag	S. Steel	1

* Repair kit components

** Gear operator should be used for size 6" DN150 and above (handle components are not included)

[1] C77 up to 6"

C31 C32 C73 C74 C77 C78

Cryogenic Flanged Full Port Floating Ball - Ordering Code System

"Mandatory option" options are marked with green background | "Standard offer" options are marked with light green background

1	2	3	4	5	6	7	8	9	10	11	12	13	14	15	16	17	18	19	20	21	22	23	24	.	.	.	30
6	0			F	C	7	3	W	-	6	6	6	M	C	G		/	X	B	W		-					
Size		Features				Series		Design		Body/ End		Ball material	Seat material	Seat/ Seals				End connection				Special features					

Size (1-2)		
Code	inch	mm
05	½"	15
07	¾"	20
10	1"	25
12*	1¼"	32
15	1½"	40
20	2"	50
25*	2½"	65
30	3"	80
40	4"	100
60	6"	150
80	8"	200

* only for series 73/78

Features (3-6)	
C	Cryogenic
F	Fire safe
N	Control service

Series (7-8)	
C31	ANSI #150 std. port
C32	ANSI #300 std. port
C73	ANSI #150 full port
C74	ANSI #300 full port
C77	DIN PN 16 full port
C78	DIN PN 40 full port

Design (9)	
W	Total HermetiX Integrity package

Body material (11)	
6	CF8M
1	Bronze
7	Monel

End material (12)	
6	CF8M
1	Bronze
7	Monel

Ball material (13)	
6	S. St.
1	Bronze
7	Monel

Stem material (14)	
M	High Strength S. Steel
6	S. St. A351
Z	Inconel

Seat material (15)	
A	TFM
C	PCTFE
P	CF PTFE

Inner Seal Material (16)	
A	TFM
G	Expanded graphite

Outer Seal Material (17)	
G	Expanded graphite
A	TFM

End connections (19-22)	
Flanged	
150(2)*	ASME B16.5 #150 RF
300(2)**	ASME B16.5 #300 RF
PN16(2)***	EN1092 PN16 RF
PN40(2)****	EN1092 PN40 RF

* C31, 73 series
** C32, C74 series
*** C77 series
**** C78 series

Special Features (24-30)	
SPR	Spring loaded seat, valve 21/2" Full port and up
SPR	Spring loaded seat, up to 2½" std. port
6.0	Short bonnet
B	Body made from rolled bar
FF	Flat face
F1	F1 - DIN 3202-1 RF fase-to-face size
F4	F4 - DIN 3202-1 RF fase-to-face size
F5	F5 - DIN 3202-1 RF fase-to-face size
Vxx	V port (xx = angle)
VBxx	Characterized control ball